Village of Cashton Public Noticed Permit Fact Sheet

General Information

Permit Number	WI-0020915-12-0
Permittee	Village of Cashton, PO Box 188 811 Main St, Cashton, WI 54619
Permitted Facility	Cashton Wastewater Treatment Facility, N26818 Market Rd, Cashton, WI
Permit Term	January 01, 2027 to December 31, 2031
Discharge Location	West Bank of the Little La Crosse River about 50 feet south of the Mascot Avenue Bridge in the Village of Melvina
Receiving Water	Little La Crosse River in Little La Crosse River Watershed of Bad Axe - La Crosse River Basin in Monroe County
Stream Flow ($Q_{7,10}$)	2.8 cfs
Stream Classification	Coldwater, non-public water supply
Discharge Type	Existing, continuous
Annual Average Design Flow	0.121 million gallons per day (MGD)
Industrial or Commercial Contributors	None
Plant Classification	A1 - Suspended Growth Processes; B - Solids Separation; C - Biological Solids/Sludges; D - Disinfection; L - Laboratory; SS - Sanitary Sewage Collection System
Approved Pretreatment Program?	N/A

Facility Description

The Cashton wastewater treatment facility has an annual average design flow of 0.121 MGD and treats domestic wastewater from the Village of Cashton and the Village of Melvina. The facility serves an approx. population of 1,225 residents with no significant industrial contributors. Treatment consists of fine mechanical screening followed by process control basins or selector basins, an oxidation ditch with brush aerators, a final clarifier, and seasonal disinfection via UV light prior to discharge to the Little La Crosse River. Waste activated sludge is stored in a sludge storage tank. It is then dewatered by a vertical screw press and stored as cake sludge in a covered building prior to land application on Department approved agricultural fields. Sludge from the sludge storage tank may also be hauled to another permitted facility for additional treatment. Cake sludge can also be landfilled if needed. The Department approved the water quality trading (WQT) plan (WQT-2026-0023) submitted by the permittee as a way to demonstrate compliance with water quality based effluent limits (WQBELs) for total phosphorus. The plan provides calculations and a table that shows the amount of phosphorus credits that will be available each year. See specific sections of the fact sheet for details on limitation and monitoring changes for this permit term.

Substantial Compliance Determination

Enforcement During Last Permit: Two notices of noncompliance (NONs) were issued for SSOs resulting from breaks in the force main that runs to the treatment facility (treatment facility is located between Cashton and Melvina, several miles from both). No other enforcement actions were taken against the permittee.

After a desktop review of all discharge monitoring reports, CMARs, land application reports and a site visit on 8/20/2025 the Cashton Wastewater Treatment Facility has been found to be in substantial compliance with their current permit.

Compliance determination entered by Logan Rubeck on 9/14/2026.

Sample Point Descriptions

Sample Point Designation		
Sample Point Number	**Discharge Flow, Units, and Averaging Period**	**Sample Point Location, Waste Type/Sample Contents and Treatment Description (as applicable)**
702	0.097 MGD Sept 2025 – August 2026	Representative 24-hr flow proportional composite samples shall be collected immediately after the influent Parshall flume located in the fine screen building. Influent flow is metered via a Parshall flume and ultrasonic transducer.
004	0.097 MGD Sept 2025 – August 2026	Representative 24-hr flow proportional composite samples shall be collected in the effluent channel prior to disinfection and grab samples shall be collected in the channel after disinfection.
005	23 dry US tons	Representative samples shall be collected from the cake sludge storage building prior to land application or hauling to another facility.
006	New outfall this permit term	Representative samples shall be collected from the sludge storage tank prior to land application or hauling to another facility.

Permit Requirements

1 Influent – Monitoring Requirements

1.1 Sample Point Number: 702- INFLUENT

Monitoring Requirements and Limitations					
Parameter	**Limit Type**	**Limit and Units**	**Sample Frequency**	**Sample Type**	**Notes**
Flow Rate		MGD	Daily	Continuous	
BOD5, Total		mg/L	2/Week	24-Hr Flow Prop Comp	
Suspended Solids, Total		mg/L	2/Week	24-Hr Flow Prop Comp	

Changes from Previous Permit:

Influent limitations and monitoring requirements were evaluated for this permit term and no changes were required in this permit section.

Explanation of Limits and Monitoring Requirements

Monitoring of influent flow, BOD5 and total suspended solids is required by s. NR 210.04(2), Wis. Adm. Code, to assess wastewater strengths and volumes and to demonstrate the percent removal requirements in s. NR 210.05, Wis. Adm. Code, and in the Standard Requirements section of the permit.

2 Surface Water - Monitoring and Limitations

2.1 Sample Point Number: 004- PRIOR to LITTLE LACROSSE RIVER

Monitoring Requirements and Limitations					
Parameter	**Limit Type**	**Limit and Units**	**Sample Frequency**	**Sample Type**	**Notes**
Flow Rate		MGD	Daily	Continuous	
BOD5, Total	Weekly Avg	26 lbs/day	2/Week	Calculated	
BOD5, Total	Weekly Avg	27 mg/L	2/Week	24-Hr Flow Prop Comp	Limit applies May - Oct
BOD5, Total	Monthly Avg	27 mg/L	2/Week	24-Hr Flow Prop Comp	
BOD5, Total	Weekly Avg	45 mg/L	2/Week	24-Hr Flow Prop Comp	Limit applies Nov - April
BOD5, Total	Monthly Avg	30 mg/L	2/Week	24-Hr Flow Prop Comp	

Monitoring Requirements and Limitations					
Parameter	**Limit Type**	**Limit and Units**	**Sample Frequency**	**Sample Type**	**Notes**
Suspended Solids, Total	Weekly Avg	27 mg/L	2/Week	24-Hr Flow Prop Comp	Limit applies May - Oct
Suspended Solids, Total	Monthly Avg	27 mg/L	2/Week	24-Hr Flow Prop Comp	
Suspended Solids, Total	Weekly Avg	45 mg/L	2/Week	24-Hr Flow Prop Comp	Limit applies Nov - April
Suspended Solids, Total	Monthly Avg	30 mg/L	2/Week	24-Hr Flow Prop Comp	
pH Field	Daily Max	9.0 su	Daily	Grab	See pH section below
pH Field	Daily Min	6.0 su	Daily	Grab	
Dissolved Oxygen		mg/L	Daily	Grab	Monitoring required May – Oct. See DO section in permit.
Nitrogen, Ammonia (NH3-N) Total	Weekly Avg	18 mg/L	2/Week	24-Hr Flow Prop Comp	Limit applies May - Oct
Nitrogen, Ammonia (NH3-N) Total	Monthly Avg	8.6 mg/L	2/Week	24-Hr Flow Prop Comp	
Nitrogen, Ammonia (NH3-N) Total	Weekly Avg	17 mg/L	2/Week	24-Hr Flow Prop Comp	Limit applies Nov - April
Nitrogen, Ammonia (NH3-N) Total	Monthly Avg	7.8 mg/L	2/Week	24-Hr Flow Prop Comp	
E. coli	Geometric Mean - Monthly	126 #/100 ml	Weekly	Grab	Limit & monitoring apply May - Sept
E. coli	% Exceedance	10 Percent	Monthly	Calculated	Limit & monitoring apply May - Sept. See the E. coli Percent Limit section in permit. Enter the result in the DMR on the last day of the month.
Chloride		mg/L	Monthly	24-Hr Flow Prop Comp	Monthly monitoring required in 2030.
Copper, Total Recoverable		ug/L	Monthly	24-Hr Flow Prop Comp	Monthly monitoring required in 2030. Copper & hardness samples shall be at the same time.
Hardness, Total as CaCO3		mg/L	Monthly	24-Hr Flow Prop Comp	
Phosphorus, Total	Monthly Avg	5.5 mg/L	2/Week	24-Hr Flow Prop Comp	Limit effective throughout the permit term, as it

Monitoring Requirements and Limitations					
Parameter	**Limit Type**	**Limit and Units**	**Sample Frequency**	**Sample Type**	**Notes**
					represents a minimum control level.
Phosphorus, Total		lbs/day	2/Week	Calculated	Report daily mass discharged using Equation 1a. in the WQT section of permit.
WQT Credits Used (TP)		lbs/month	Monthly	Calculated	Report WQT TP Credits used per month using Equation 2c. in the Water Quality Trading (WQT) section of permit. Available TP Credits are specified in Table 2 of the permit & in the approved Water Quality Trading Plan.
WQT Credits Used (TP)	Annual Total	148 lbs/yr	Monthly	Calculated	The sum of total monthly credits used may not exceed Table 2 values in the permit.
WQT Computed Compliance (TP)	Monthly Avg	0.225 mg/L	Monthly	Calculated	Report the WQT TP Computed Compliance value using Equation 3a. in the Water Quality Trading (WQT) section of permit. Value entered on the last day of the month.
WQT Computed Compliance (TP)	6-Month Avg	0.075 mg/L	Monthly	Calculated	Compliance with the six-month average limit is evaluated at the end of the six-month period on June 30 and Dec 31.
WQT Computed Compliance (TP)	6-Month Avg	0.076 lbs/day	Monthly	Calculated	Report the WQT TP Computed Compliance value using Equation 3b. in the Water Quality Trading (WQT) section of permit. Compliance with the six-month average limit is evaluated at the end of the six-month period on June 30 and Dec 31.
Temperature		deg F	2/Week	Multiple	Monitoring required in 2030. See temperature

Monitoring Requirements and Limitations					
Parameter	**Limit Type**	**Limit and Units**	**Sample Frequency**	**Sample Type**	**Notes**
Maximum				Grab	section in permit.
Nitrogen, Total Kjeldahl		mg/L	See Listed Qtr(s)	24-Hr Flow Prop Comp	See Nitrogen Series Monitoring section in permit for specific quarters that monitoring is required.
Nitrogen, Nitrite + Nitrate Total		mg/L	See Listed Qtr(s)	24-Hr Flow Prop Comp	
Nitrogen, Total		mg/L	See Listed Qtr(s)	Calculated	See Nitrogen Series Monitoring section in permit Total Nitrogen shall be calculated as the sum of reported values for Total Kjeldahl Nitrogen and Total Nitrite + Nitrate Nitrogen.

Changes from Previous Permit

Effluent limitations and monitoring requirements were evaluated for this permit term and the following changes were made from the previous permit: removal of the phosphorus variance and inclusion of WQT requirements to meet the phosphorus limits.

Explanation of Limits and Monitoring Requirements

Monitoring Frequencies- The *Monitoring Frequencies for Individual Wastewater Permits guidance* (April 12, 2021) recommends that standard monitoring frequencies be included in individual wastewater permits based on the size and type of the facility, in order to characterize effluent quality and variability, to detect events of noncompliance, and to ensure consistency in permits issued across the state. Guidance and requirements in administrative code were considered when determining the appropriate monitoring frequencies for pollutants that have final effluent limits in effect during this permit term. At this time, no monitoring frequency changes are needed.

Limits were determined for Cashton's existing discharge to the Little La Crosse River using chs. NR 102, 104, 105, 106, 207, 210, 212 and 217 of the Wisconsin Administrative Code (where applicable). For additional information on any of the limits see the October 9, 2026 memo from Ben Hartenbower to Holly Heldstab titled "Water Quality-Based Effluent Limitations for the Cashton Wastewater Treatment Plant WPDES Permit No. WI-0020915".

MUNICIPAL EFFLUENT LIMITS – In accordance with the federal regulation 40 CFR 122.45(d), and to comply with the expression of limits requirements in ss. NR 106.07 and NR 205.065(7), Wis. Adm. Codes, limits in this permit are to be expressed as weekly average and monthly average limits whenever practicable.

Phosphorus: Phosphorus requirements are based on the Phosphorus Rules that became effective December 1, 2010 as detailed in NR 102 Water Quality Standards and NR 217 Effluent Standards and Limitations for Phosphorus. Chapter NR 217 of the Wis. Adm. Code addresses point source dischargers of phosphorus to surface waters. Currently in NR 217 Wis. Adm. Code there are two methods used to determine if a phosphorus limit is needed: a technology based effluent limit (TBEL) and a water quality based effluent limit (WQBEL). Based on the size and classification of the river, the water quality criteria for the Little La Crosse River is 0.075 mg/L. In this case, the WQBEL is 0.225 mg/L (monthly average), 0.075 mg/L & 0.076 lbs/day (6-month average). For the reasons explained in the April 30, 2012 paper entitled 'Justification for Use of Monthly, Growing Season and Annual Average Periods for Expression of WPDES Permit Limits for Phosphorus Discharges in Wisconsin', WDNR has determined that it is impracticable to express the phosphorus

WQBEL for the permittee as a maximum daily, weekly or monthly value. The final effluent limits were derived from and comply with the applicable water quality criterion. The phosphorus concentration limit is necessary to prevent backsliding during the term of the permit, therefore a monthly average limit of 5.5 mg/L will be retained in the permit. The wastewater treatment facility is not able to meet the WQBEL. This permit authorizes the use of trading as a tool to demonstrate compliance with the phosphorus WQBELs. This permit includes terms and conditions related to the Water Quality Trading Plan (WQT-2026-0023) or approved amendments thereof. The total 'WQT TP Credits' available are designated in the approved WQT Plan. Cashton is generating credits via streambank stabilization projects with habitat features. The WQT Plan proposes the generation of 148 lbs/yr of phosphorus credits for the next five years.

Additional WQT subsections in the permit provide information on compliance determinations, annual reporting and re-opening of the permit.

PFOS and PFOA: NR 106 Subchapter VIII – Permit Requirements for PFOS and PFOA Dischargers became effective on August 1, 2022. Pursuant to s. NR 106.98(3)(b), Wis. Adm. Code, the department evaluated the need for PFOS and PFOA monitoring taking into consideration the presence of potential PFOS or PFOA industrial wastes, remediation sites and other potential sources of PFOS or PFOA. Based on information available at the time the permit was drafted, the department has determined the permittee does not need to sample for PFOS or PFOA as part of this permit reissuance. The department may re-evaluate the need for sampling at the next permit reissuance if new information becomes available that suggests PFOS or PFOA may be present in the discharge.

3 Land Application - Monitoring and Limitations

Municipal Sludge Description						
Sample Point	**Sludge Class (A or B)**	**Sludge Type (Liquid or Cake)**	**Pathogen Reduction Method**	**Vector Attraction Method**	**Reuse Option**	**Amount Reused/Disposed (Dry Tons/Year)**
005	B	Cake	Fecal Coliform	Incorporation	Land application or hauled to another facility	23
006	B	Liquid				New outfall
Does sludge management demonstrate compliance? Yes						
Is additional sludge storage required? No						
Is Radium-226 present in the water supply at a level greater than 2 pCi/liter? No						
Is a priority pollutant scan required? No						

3.1 Sample Point Number: 005- CAKE SLUDGE and 006- LIQUID SLUDGE

Sludge Management: The permittee shall contact the Department prior to recycling/disposing of any sludge. If the permittee has not collected a sample for General Permit, WI-0012345-1, "PFAS Monitoring for Sewage Sludge (Biosolids) Generators" by 01/01/2027, the permittee shall monitor for PFAS and PFOA + PFOS between 01/01/2027 and 06/30/2027 for the 2027 annually required monitoring event.

Monitoring Requirements and Limitations					
Parameter	**Limit Type**	**Limit and Units**	**Sample Frequency**	**Sample Type**	**Notes**
Solids, Total		Percent	Annual	Composite	
Arsenic Dry Wt	Ceiling	75 mg/kg	Annual	Composite	

Monitoring Requirements and Limitations					
Parameter	**Limit Type**	**Limit and Units**	**Sample Frequency**	**Sample Type**	**Notes**
Arsenic Dry Wt	High Quality	41 mg/kg	Annual	Composite	
Cadmium Dry Wt	Ceiling	85 mg/kg	Annual	Composite	
Cadmium Dry Wt	High Quality	39 mg/kg	Annual	Composite	
Copper Dry Wt	Ceiling	4,300 mg/kg	Annual	Composite	
Copper Dry Wt	High Quality	1,500 mg/kg	Annual	Composite	
Lead Dry Wt	Ceiling	840 mg/kg	Annual	Composite	
Lead Dry Wt	High Quality	300 mg/kg	Annual	Composite	
Mercury Dry Wt	Ceiling	57 mg/kg	Annual	Composite	
Mercury Dry Wt	High Quality	17 mg/kg	Annual	Composite	
Molybdenum Dry Wt	Ceiling	75 mg/kg	Annual	Composite	
Nickel Dry Wt	Ceiling	420 mg/kg	Annual	Composite	
Nickel Dry Wt	High Quality	420 mg/kg	Annual	Composite	
Selenium Dry Wt	Ceiling	100 mg/kg	Annual	Composite	
Selenium Dry Wt	High Quality	100 mg/kg	Annual	Composite	
Zinc Dry Wt	Ceiling	7,500 mg/kg	Annual	Composite	
Zinc Dry Wt	High Quality	2,800 mg/kg	Annual	Composite	
Nitrogen, Total Kjeldahl		Percent	Annual	Composite	
Nitrogen, Ammonium (NH4-N) Total		Percent	Annual	Composite	
Phosphorus, Total		Percent	Annual	Composite	
Phosphorus, Water Extractable		% of Tot P	Annual	Composite	
Potassium, Total Recoverable		Percent	Annual	Composite	
PCB Total Dry Wt	Ceiling	50 mg/kg	Once	Composite	Once in 2028
PCB Total Dry Wt	High Quality	10 mg/kg	Once	Composite	Once in 2028
PFOA + PFOS		ug/kg	Annual	Calculated	Monitor for PFOA + PFOS between 01/01/2027 - 06/30/2027 to meet the requirements of PFAS General Permit (WI-0012345-1). Report the sum of PFOA and PFOS. See

Monitoring Requirements and Limitations					
Parameter	**Limit Type**	**Limit and Units**	**Sample Frequency**	**Sample Type**	**Notes**
					PFAS Permit Sections for more information.
PFAS Dry Wt			Annual	Grab	Monitor for PFOA + PFOS between 01/01/2027 - 06/30/2027 to meet the requirements of PFAS General Permit (WI-0012345-1). Perfluoroalkyl and Polyfluoroalkyl Substances based on updated DNR PFAS List. See PFAS Permit Sections for more information.

Changes from Previous Permit:

Sludge limitations and monitoring requirements were evaluated for this permit term and the following changes were made from the previous permit:

1) Liquid sludge Outfall 006 was added to provide a permitted outfall in the event that the vertical screw press breaks and cannot be repaired in a timely manner. The vertical screw press is original to the treatment facility and the manufacture no longer supports the equipment so lead times on parts can be several weeks or more.

2) Monitoring for PFAS is required pursuant to s. NR 204.06(2)(b)9., Wis. Adm. Code. To maintain compliance with General Permit, WI-0012345-1, "PFAS Monitoring for Sewage Sludge (Biosolids) Generators" language has been added to the individual permit to restate that the first sample event for PFAS, PFOA+PFOS is required by June 30, 2027. If the PFOA+PFOS result is under 20 ug/kg General Permit, WI-0012345-1, "PFAS Monitoring for Sewage Sludge (Biosolids) Generators" will be discontinued. If the results are over 20 ug/kg, General Permit section 4.3.3 must be followed (See link https://dnr.wisconsin.gov/sites/default/files/topic/Wastewater/PFASMonitoringforSewageSludgeGenerators-GeneralPermit.pdf).

Explanation of Limits and Monitoring Requirements

Requirements for disposal, including land application of municipal sludge, are determined in accordance with ch. NR 204, Wis. Adm. Code. Ceiling and high-quality limits for metals in sludge are specified in s. NR 204.07(5). Requirements for pathogens are specified in s. NR 204.07(6) and in s. NR 204.07 (7) for vector attraction requirements. Limitations for PCBs are addressed in s. NR 204.07(3)(k).

PFAS- The presence and fate of PFAS in municipal and industrial sludges is an emerging public health concern. EPA has developed a draft risk assessment to determine future land application rates and released this risk assessment in January of 2025. The department is evaluating this new information. Until a decision is made, the "Interim Strategy for Land Application of Biosolids and Industrial Sludges Containing PFAS" should be followed

Collecting sludge data on PFAS concentrations from a wide range of wastewater treatment facilities will help protect public health from exposure to elevated levels of PFAS and determine the department's implementation of EPA's recommendations. To quantitate this risk, PFAS sampling has been included in this WPDES permit pursuant to ss. NR 214.18(5)(b) and NR 204.06(2)(b)9., Wis. Adm. Code.

4 Schedules

4.1 Water Quality Trading (WQT) Annual Report

Required Action	Due Date
Annual WQT Report: Submit an annual WQT report that shall cover the first year of the permit term. The WQT Report shall include: The number of pollutant reduction credits (lbs/month) used each month of the previous year to demonstrate compliance; The source of each month's pollutant reduction credits by identifying the approved water quality trading plan that details the source; A summary of the annual inspection of each nonpoint source management practice that generated any of the pollutant reduction credits used during the previous year; and Identification of noncompliance or failure to implement any terms or conditions of this permit with respect to water quality trading that have not been reported in discharge monitoring reports.	01/31/2028
Annual WQT Report #2: Submit an annual WQT report that shall cover the previous year.	01/31/2029
Annual WQT Report #3: Submit an annual WQT report that shall cover the previous year.	01/31/2030
Annual WQT Report #4: Submit the 4th annual WQT report. If the permittee wishes to continue to comply with phosphorus limits through WQT in subsequent permit terms, the permittee shall submit a revised WQT plan including a demonstration of credit need, compliance record of the existing WQT, and any additional practices needed to maintain compliance over time.	01/31/2031
Annual WQT Report Required After Permit Expiration: In the event that this permit is not reissued by the expiration date, the permittee shall continue to submit annual WQT reports by January 31 each year covering the total number of pollutant credits used, the source of the pollution reduction credits, a summary of annual inspection reports performed, and identification of noncompliance or failure to implement any terms or conditions of the approved water quality trading plan for the previous calendar year.	

Explanation of Schedule: Reports are required that include the following information:

- Verification that site inspections occurred;
- Results of site inspection findings;
- Identification of noncompliance or failure to implement any terms or conditions of the permit or credit verification package that have not been reported in discharge monitoring reports;
- Any applicable notices of termination or management practice registration; and
- A summary of credits used each month over the calendar year

Other Comments

None

Attachments

- Water Quality Based Effluent Limits: October 9, 2026 memo from Ben Hartenbower to Holly Heldstab titled "Water Quality-Based Effluent Limitations for the Cashton Wastewater Treatment Plant WPDES Permit No. WI-0020915".
- Water Quality Trading Plan, WQT-2026-0023
- Water Quality Trading Conditional Credit Certification letter dated August 17, 2026 from Jenna Monahan to Derek Trescher, Village President

Justification Of Any Waivers From Permit Application Requirements

No waivers requested or granted as part of this permit reissuance

Prepared By: Holly Heldstab, Wastewater Specialist **Date:** 11/03/2026

CORRESPONDENCE/MEMORANDUM

State of Wisconsin

DATE: October 9, 2026

TO: Holly Heldstab – Eau Claire

FROM: Benjamin Hartenbower – Eau Claire

SUBJECT: Water Quality-Based Effluent Limitations for the Cashton Wastewater Treatment Facility
WPDES Permit No. WI-0020915

This is in response to your request for an evaluation of the need for water quality-based effluent limitations (WQBELs) using chapters NR 102, 104, 105, 106, 207, 210, 212, and 217 of the Wisconsin Administrative Code (where applicable) for the discharge from the Cashton Wastewater Treatment Facility in Monroe County. This municipal wastewater treatment facility (WWTF) discharges to the Little La Crosse River, located in the Little La Crosse River Watershed in the Bad Axe - La Crosse River Basin. The evaluation of the permit recommendations is discussed in more detail in the attached report.

Based on our review, the following recommendations are made on a chemical-specific basis at Outfall 004:

Parameter	Daily Maximum	Daily Minimum	Weekly Average	Monthly Average	Six-Month Average	Footnotes
Flow Rate						1,2
BOD_5 May - October November - April			27 mg/L, 26 lbs/day 45 mg/L	**27 mg/L** 30 mg/L		1,3,4
TSS May - October November - April			27 mg/L 45 mg/L	**27 mg/L** 30 mg/L		1,3,4
pH	9.0 s.u.	6.0 s.u.				1,3
Dissolved Oxygen						5
Ammonia Nitrogen May - October November - April			18 mg/L 17 mg/L	8.6 mg/L 7.8 mg/L		1
E. coli May - September				126 #/100 mL geometric mean		6
Copper						1,7
Chloride						1,7
Hardness						1,8
Phosphorus MCL WQT Computed (TP)				5.5 mg/L 0.225 mg/L	0.075 mg/L, 0.076 lbs/day	9
Temperature						10
TKN, Nitrate+Nitrite, and Total Nitrogen						11

Printed on Recycled Paper

Footnotes:

1. No changes from the current permit.
2. Monitoring only.
3. These limits are based on the Cold Water (CW) community of the immediate receiving water as described in s. NR 210.05(1), Wis. Adm. Code
4. Additional limits to comply with the expression of limits requirements in ss. NR 106.07 and NR 205.065(7), Wis. Adm. Codes, are included in bold.
5. Monitoring from May to October.
6. Additional limit: No more than 10 percent of *E. coli* bacteria samples collected in any calendar month may exceed 410 count/100 mL.
7. Monitoring at a frequency to ensure that 11 samples are available at the next permit issuance.
8. Hardness monitoring is recommended because of the relationship between hardness and daily maximum limits based on acute toxicity criteria.
9. WQT computed compliance limits also require a corresponding Minimum Control Level (MCL) of 5.5 mg/L to be met at the discharge.
10. Monitoring in the fourth year of the permit term.
11. As recommended in the Department's October 1, 2019 Guidance for Total Nitrogen Monitoring in Wastewater Permits, annual total nitrogen monitoring is recommended for all minor municipal permittees. Sections 283.37(5) and 283.55(1)(e), Wis. Stats, and ss. NR 200.065(1)(g) and NR 200.065(1)(h), Wis. Adm. Codes, provide the authority to request this monitoring during the permit term. Total Nitrogen is the sum of nitrite (NO_2), nitrate (NO_3), and total Kjeldahl nitrogen (TKN) (all expressed as N).

No WET testing is required because information related to the discharge indicates low to no risk for toxicity.

Please consult the attached report for details regarding the above recommendations. If there are any questions or comments, please contact Benjamin Hartenbower at (715) 225-4705 or benjamin.hartenbower@wisconsin.gov or Diane Figiel at Diane.Figiel@wisconsin.gov.

Attachments (3) – Narrative, Thermal Table, & Map

PREPARED BY: _____ Date: 10/09/26

Benjamin Hartenbower, PE
Water Resources Engineer

E-cc: Logan Rubeck, Wastewater Engineer – WCR/Eau Claire
Geisa Bittencourt, Regional Wastewater Supervisor – WCR/Eau Claire
Diane Figiel, Water Resources Engineer – WY/3
AJ Jeninga-Nehls, Wastewater Specialist – WY/Green Bay
Kurt Rasmussen, Water Quality Biologist – WCR/La Crosse

Attachment #1

Water Quality-Based Effluent Limitations for the Cashton Wastewater Treatment Facility

WPDES Permit No. WI-0020915

Prepared by: Benjamin P. Hartenbower

PART 1 – BACKGROUND INFORMATION

Facility Description

The Cashton Wastewater Treatment Facility treats domestic wastewater from the Villages of Cashton and Melvina. Treatment consists of a fine mechanical screen followed by process control basins or selector basins, an oxidation ditch with brush aerators, a final clarifier, composite effluent sampling, seasonal ultraviolet disinfection, flow measurement with a Parshall flume and transducer, and grab sample collection prior to discharge to the Little La Crosse River. Waste sludge is stored in a sludge storage tank and will be dewatered by a vertical screw press and stored as cake sludge in a covered building.

Attachment #3 is a map of the area showing the approximate location of Outfall 004.

Existing Permit Limitations

The current permit, which expired on 03/31/2026, includes the following effluent limitations and monitoring requirements.

Parameter	Daily Maximum	Daily Minimum	Weekly Average	Monthly Average	Six-Month Average	Footnotes
Flow Rate						1,2
BOD_5 May - October November - April			27 mg/L, 26 lbs/day 45 mg/L	**27 mg/L** 30 mg/L		2,3,4
TSS May - October November - April			27 mg/L 45 mg/L	**27 mg/L** 30 mg/L		2,3,4
pH	9.0 s.u.	6.0 s.u.				2
Dissolved Oxygen						1,2,5
Ammonia Nitrogen May - October November - April			18 mg/L 17 mg/L	8.6 mg/L 7.8 mg/L		
Fecal Coliform May - September				400 #/100 mL geometric mean		6
E. Coli May - September				126 #/100 mL geometric mean		
Copper						1
Chloride						1
Hardness						1

Attachment #1

Parameter	Daily Maximum	Daily Minimum	Weekly Average	Monthly Average	Six-Month Average	Footnotes
Phosphorus Interim Final WQBEL				 6.1 mg/L 0.225 mg/L	 0.075 mg/L, 0.076 lbs/day	7
Temperature						8
TKN, Nitrate+Nitrite, and Total Nitrogen						1

Footnotes:

1. Monitoring only.
2. These limitations are not being evaluated as part of this review. Because the water quality criteria (WQC), reference effluent flow rates, and receiving water characteristics have not changed, limitations for these water quality characteristics do not need to be re-evaluated at this time.
3. These limits are based on the Cold Water (CW) community of the immediate receiving water as described in s. NR 210.05(1), Wis. Adm. Code.
4. Additional limits to comply with the expression of limits requirements in ss. NR 106.07 and NR 205.065(7), Wis. Adm. Codes, are included in bold.
5. Monitoring May through October.
6. A compliance schedule is in the current permit for the *E. coli* limit to replace the Fecal Coliform limit by 09/30/2021.
7. Phosphorus Variance Interim Limit
8. Monitoring in 2025.

Receiving Water Information

- Name: Little La Crosse River
- Waterbody Identification Code (WBIC): 1655900
- Classification used in accordance with chs. NR 102 and 104, Wis. Adm. Code:
  Cold Water (Category 5), Class III trout stream, non-public water supply.
- Low flows used in accordance with chs. NR 106 and 217, Wis. Adm. Code:
  The following 7-Q_{10} and 7-Q_2 values are from USGS for Station 05382410, at Melvina, in the Little La Crosse River where Outfall 004 is located.
  7-Q_{10} = 2.8 cubic feet per second (cfs)
  7-Q_2 = 4.1 cfs
  Harmonic Mean Flow = 7.2 cfs using a drainage area of 18.4 mi^2

The Harmonic Mean has been estimated based on average flow and the 7-Q_{10} using an equation from U.S. EPA's *Technical Support Document for Water Quality-Based Toxics Control* (March 1991, EPA/505/2-90-001, pgs. 88-89).

- Hardness: 226 mg/L as $CaCO_3$. This value represents the geometric mean of hardness results collected in the Little La Crosse River Watershed from 10/04/1994 to 09/21/1999 (n = 226).
- % of flow used to calculate limits in accordance with s. NR 106.06(4)(c)5., Wis. Adm. Code: 25%
- Source of background concentration data: Arsenic, Cadmium, Chromium, Copper, Lead, Nickel, and Zinc data are from the Little La Crosse River Watershed. The numerical values are shown in the tables below. If no data is available, the background concentration is assumed to be negligible and a value of zero is used in the computations. Background data for calculating effluent limitations for ammonia nitrogen are described later.
- Multiple dischargers: None
- Impaired Water Status: The Little La Crosse River is impaired for phosphorus (milepoints 0 to 10.25).

Effluent Information

- Design flow rates:
  Annual average = 0.121 million gallons per day (MGD)

For reference, the actual average flow from 04/01/2021 to 08/31/2026 was 0.090 MGD.

- Hardness: 253 mg/L as $CaCO_3$. This value represents the geometric mean of effluent data from 01/07/2025 to 12/09/2025 (n = 6).
- Acute dilution factor used in accordance with s. NR 106.06(3)(c), Wis. Adm. Code: Not applicable – this facility does not have an approved Zone of Initial Dilution (ZID).
- Wastewater Source: Domestic wastewater with no industrial contributors.
- Water supply: Cashton Waterworks
- Fraction of the effluent flow withdrawn from receiving water:
  ("f" as described in s. NR 106.06, Wis. Adm. Code): 0
- Additives: one for phosphorus control (aluminum sulfate).
- Effluent Characterization: This facility is categorized as a minor municipal discharger, so the permit application required effluent sample analyses for a limited number of common pollutants, as specified in s. NR 200.065, Table 1, Wis. Adm. Code, primarily metal substances.
- The permit-required monitoring for ammonia, chloride, copper, hardness, and phosphorus from April 2021 to August 2026 is used in this evaluation.
- Effluent data for substances for which a single sample was analyzed is shown in the tables in Part 2, in the column titled "MEAN EFFL. CONC.". Otherwise, substances with multiple effluent data are shown in the tables below or in their respective parts in this evaluation.

Attachment #1

Copper and Chloride Effluent Data at Outfall 004

Sample Date	Copper µg/L	Sample Date	Chloride mg/L
01/07/2025	26	01/07/2025	280
02/11/2025	22	02/11/2025	320
03/11/2025	17	03/11/2025	310
04/15/2025	16	04/15/2025	200
05/14/2025	19	05/14/2025	230
06/04/2025	14	06/04/2025	240
07/09/2025	11	07/09/2025	130
08/12/2025	7.5	08/12/2025	250
09/09/2025	20	09/09/2025	300
10/07/2025	11	10/07/2025	230
11/11/2025	20	11/11/2025	270
12/09/2025	21	12/09/2025	310
1-day P_{99}	33	1-day P_{99}	410
4-day P_{99}	24	4-day P_{99}	326

The following table presents the average concentrations and loadings at Outfall 004 from April 2021 to August 2026 for all parameters with limits in the current permit to meet the requirements of s. NR 201.03(6), Wis. Adm. Code:

Parameters with Effluent Limits for Outfall 004

	Average Measurement	Average Mass Discharged
BOD_5	3.6 mg/L	2.7 lbs/day
TSS	3.0 mg/L	
pH	7.30 s.u.	
Ammonia Nitrogen	0.96 mg/L	
Fecal Coliform	19 #/100 ml	
E. Coli	14 #/100 ml	
Phosphorus	2.8 mg/L	2.0 lbs/day

PART 2 – WATER QUALITY-BASED EFFLUENT LIMITATIONS FOR TOXIC SUBSTANCES – EXCEPT AMMONIA NITROGEN

Permit limits for toxic substances are required whenever any of the following occur:

1. The maximum effluent concentration exceeds the calculated limit (s. NR 106.05(3), Wis. Adm. Code)
2. If 11 or more detected results are available in the effluent, the upper 99th percentile (or P_{99}) value exceeds the comparable calculated limit (s. NR 106.05(4), Wis. Adm. Code)
3. If fewer than 11 detected results are available, the mean effluent concentration exceeds 1/5 of the calculated limit (s. NR 106.05(6), Wis. Adm. Code)

Acute Limits based on 1-Q_{10}

Daily maximum effluent limitations for toxic substances are based on the acute toxicity criteria (ATC), listed in ch. NR 105, Wis. Adm. Code. Previously daily maximum limits for toxic substances were calculated as two times the ATC. However, changes to ch. NR 106, Wis. Adm. Code, (September 1, 2016) require the Department to calculate acute limitations using the same mass balance equation as used for other limits along with the 1-Q_{10} receiving water low flow to determine if more restrictive effluent limitations are needed to protect the receiving stream from discharges which may cause or contribute to an exceedance of the acute water quality standards. The mass balance equation is provided below.

$$\text{Limitation} = \frac{(WQC)\,(Qs + (1-f)\,Qe) - (Qs - f\,Qe)\,(Cs)}{Qe}$$

Where:

WQC =Acute toxicity criterion or secondary acute value according to ch. NR 105, Wis. Adm. Code.

Qs = average minimum 1-day flow which occurs once in 10 years (1-day Q_{10}) if the 1-day Q_{10} flow data is not available = 80% of the average minimum 7-day flow which occurs once in 10 years (7-day Q_{10}).

Qe = Effluent flow (in units of volume per unit time) as specified in s. NR 106.06(4)(d), Wis. Adm. Code.

f = Fraction of the effluent flow that is withdrawn from the receiving water, and

Cs = Background concentration of the substance (in units of mass per unit volume) as specified in s. NR 106.06(4)(e), Wis. Adm. Code.

If the receiving water is effluent dominated under low stream flow conditions, the 1-Q_{10} method of limit calculation produces the most stringent daily maximum limitations and should be used while making reasonable potential determinations. This is not the case for the Cashton Wastewater Treatment Facility, and the limits are set based on two times the acute toxicity criteria.

The following tables list the calculated WQBELs for this discharge along with the results of effluent sampling. All concentrations are expressed in terms of micrograms per Liter (µg/L), except for hardness and chloride (mg/L).

Daily Maximum Limits based on Acute Toxicity Criteria (ATC)
RECEIVING WATER FLOW = 2.2 cfs, (1-Q_{10} (estimated as 80% of the 7-Q_{10})), as specified in s. NR 106.06(3)(bm), Wis. Adm. Code.

SUBSTANCE	REF HARD. mg/L	ATC	MEAN BACK-GRD.	MAX EFFL. LIMIT**	1/5 OF EFFL. LIMIT	MEAN EFFL. CONC.	1-day P_{99}	1-day MAX. CONC.
Arsenic		340	0.4	680	136	1.10		
Cadmium	253	12.6	0.02	25.3	5.06	<0.17		
Chromium (+3)	253	3856	1.405	7712	1542.4	1.80		
Copper	253	37.3	0.96	74.5			33.23	26.00
Lead	253	262	0.454	524	104.8	<5.4		
Nickel	253	1029	2.25	2058	411.6	<4.7		
Zinc	253	271	4.46	542	108.4	55.0		
Chloride (mg/L)		757		1514			410	320

**The 2 × ATC method of limit calculation yields a more restrictive limit than consideration of ambient concentrations and 1-Q_{10} flow rates per the changes to s. NR 106.07(3), Wis. Adm. Code, effective 09/01/2016.

Weekly Average Limits based on Chronic Toxicity Criteria (CTC)
RECEIVING WATER FLOW = 0.70 cfs, (¼ of the 7-Q_{10}), as specified in s. NR 106.06(4)(c), Wis. Adm. Code.

SUBSTANCE	REF HARD. mg/L	CTC	MEAN BACK-GRD.	WEEKLY EFFL. LIMIT	1/5 OF AVE. LIMIT	MEAN EFFL. CONC.	4-day P_{99}
Arsenic		148	0.4	700	140	1.10	
Cadmium	175	3.82	0.02	18.0	3.6	<0.17	
Chromium (+3)	226	168	1.405	791	158.2	1.80	
Copper	226	20.8	0.96	95.0			24.22
Lead	226	61.6	0.454	290	58	<5.4	
Nickel	226	104	2.25	485	97	<4.7	
Zinc	226	246	4.46	1147	229.4	55.0	
Chloride (mg/L)		395		1872			326

*The indicated hardness may differ from the receiving water hardness because the receiving water hardness exceeded the maximum range in ch. NR 105, Wis. Adm. Code, over which the chronic criteria are applicable. In that case, the maximum of the range is used to calculate the criterion.

Monthly Average Limits based on Wildlife Criteria (WC)
The effluent characterization did not include any effluent sampling results for substances for which Wildlife Criteria exist.

Monthly Average Limits based on Human Threshold Criteria (HTC)
RECEIVING WATER FLOW = 1.8 cfs, (¼ of the Harmonic Mean), as specified in s. NR 106.06(4), Wis. Adm. Code.

SUBSTANCE	HTC	MEAN BACK-GRD.	MONTHLY AVE. LIMIT	1/5 OF EFFL. LIMIT	MEAN EFFL. CONC.	30-day P_{99}
Cadmium	370	0.02	3931	786	0.0000	
Chromium (+3)	3818000	1.405	40564695	8112939	1.80	
Lead	140	0.454	1483	297	0.0000	
Nickel	43000	2.25	456836	91367	0.0000	

Monthly Average Limits based on Human Cancer Criteria (HCC)
RECEIVING WATER FLOW = 1.8 cfs, (¼ of the Harmonic Mean), as specified in s. NR 106.06(4), Wis. Adm. Code.

SUBSTANCE	HCC	MEAN BACK-GRD.	MONTHLY AVE. LIMIT	1/5 OF EFFL. LIMIT	MEAN EFFL. CONC.	30-day P_{99}
Arsenic	13.3	0.4	137	27.4	1.10	

In addition to evaluating the need for limits for each individual substance for which HCC exist, s. NR 106.06(8), Wis. Adm. Code, requires the evaluation of the cumulative cancer risk. Because no effluent limits are needed based on HCC, determination of the cumulative cancer risk is not needed per s. NR 106.06(8), Wis. Adm. Code.

Conclusions and Recommendations
Based on a comparison of the effluent data and calculated limitations, effluent limits are not required for toxic substances.

Mercury– The permit application did not require monitoring for mercury because the Cashton Wastewater Treatment Facility is categorized as a minor facility as defined in s. NR 200.02(8), Wis. Adm. Code. In accordance with s. NR 106.145(3)(a)3, Wis. Adm. Code, a minor municipal discharger shall monitor, and report results of influent and effluent mercury monitoring once every three months if, "there are two or more exceedances in the last five years of the high-quality sludge mercury concentration of 17 mg/kg specified in s. NR 204.07(5), Wis. Adm. Code." A review of the past five years of sludge characteristics data reveals that all the sample results are within expected analytical ranges and well below the 17 mg/kg level. The average concentration of sludge from 05/12/2021 to 04/14/2025 was 0.86 mg/kg, with a maximum reported concentration of 1.6 mg/kg. **Therefore, no mercury monitoring is recommended at Outfall 004.**

PFOS and PFOA – The need for PFOS and PFOA monitoring is evaluated in accordance with s. NR 106.98(2), Wis. Adm. Code.

Water Supply PFAS Data

Sample Date	Sample ID	Well #	PFOS (ng/L)	PFOA (ng/L)
04/17/2023	CB03762-01	BG479	<0.3	<0.48
04/17/2023	CB03762-03	FQ001	<0.3	<0.48
		Average =	ND	ND

The limited data above shows the municipal water supply is below 1/5 of the applicable PFOS and PFOA criteria.

Biosolids PFAS Data

Sample Date	PFOS (µg/kg)	PFOA (µg/kg)
07/22/2025	12.5	1.66
	Total =	14.16

Based on the annual design flow and lack of nondomestic contributions, it is unlikely that the effluent will contain PFOS or PFOA. Therefore, **PFOS and PFOA monitoring is not recommended.**

The Department may re-evaluate the need for sampling at the next permit reissuance if new information becomes available that suggests PFOS or PFOA may be present in the discharge.

PART 3 – WATER QUALITY-BASED EFFLUENT LIMITATIONS FOR AMMONIA NITROGEN

The State of Wisconsin promulgated revised water quality standards for ammonia nitrogen in ch. NR 105, Wis. Adm. Code, effective March 1, 2004 which includes criteria based on both acute and chronic toxicity to aquatic life. The current permit has weekly average and monthly average limits. These limits are re-evaluated due to the following changes:

- Subchapter IV of ch. NR 106, Wis. Adm. Code allows limits based on available dilution instead of limits set to twice the acute criteria.
- Section NR 106.07(3), Wis. Adm. Code requires weekly and monthly average limits for municipal treatment plants
- The maximum expected effluent pH has changed

Daily Maximum Limits based on Acute Toxicity Criteria (ATC) Daily maximum limitations are based on acute toxicity criteria in ch. NR 105, Wis. Adm. Code, which are a function of the effluent pH and the receiving water classification. The acute toxicity criterion (ATC) for ammonia is calculated using the following equation:

$$\text{ATC in mg/L} = [A \div (1 + 10^{(7.204 - pH)})] + [B \div (1 + 10^{(pH - 7.204)})])$$

Where:

A = 0.411 and B = 58.4 for a Coldwater Category 5 fishery, and
pH (s.u.) = that characteristic of the effluent

The effluent pH data was examined as part of this evaluation. A total of 1979 sample results were reported from April 2021 to August 2026. The maximum reported value was 7.68 s.u. (Standard pH Units). The effluent pH was 7.59 s.u. or less 99% of the time. The 1-day P_{99}, calculated in accordance with s. NR 106.05(5), Wis. Adm. Code, is 7.54 s.u. The mean plus the standard deviation multiplied by a factor of 2.326, an estimate of the upper ninety ninth percentile for a normally distributed dataset, is 7.53 s.u. Therefore, a value of 7.59 s.u. is believed to represent the maximum reasonably expected pH, and therefore most appropriate for determining daily maximum limitations for ammonia nitrogen. Substituting a value of 7.59 s.u. into the equation above yields an ATC = 17.31 mg/L.

Daily Maximum Ammonia Nitrogen Effluent Limitations Calculation Method
In accordance with s. NR 106.32(2), Wis. Adm. Code daily maximum ammonia limitations are calculated using the 1-Q_{10} receiving water low flow if it is determined that the previous method of acute ammonia limit calculation (2×ATC) is not sufficiently protective of the fish and aquatic life. The more restrictive calculated limits shall apply.

The calculated daily maximum ammonia nitrogen effluent limits using the mass balance approach with the 1-Q_{10} (estimated as 80 % of 7-Q_{10}) and the 2×ATC approach are shown below.

Daily Maximum Ammonia Nitrogen Determination

	Ammonia Nitrogen Limit mg/L
2×ATC	34.6
1-Q_{10}	223

The 2×ATC method yields the most stringent limits for the Cashton Wastewater Treatment Facility.

Presented below is a table of daily maximum limitations corresponding to various effluent pH values. Use of this table is not necessarily recommended in the permit, but it is presented herein for informational purposes.

Daily Maximum Ammonia Nitrogen Limits – CW5

Effluent pH s.u.	Limit mg/L	Effluent pH s.u.	Limit mg/L	Effluent pH s.u.	Limit mg/L
6.0 < pH ≤ 6.1	108	7.0 < pH ≤ 7.1	66	8.0 < pH ≤ 8.1	14
6.1 < pH ≤ 6.2	106	7.1 < pH ≤ 7.2	59	8.1 < pH ≤ 8.2	11
6.2 < pH ≤ 6.3	104	7.2 < pH ≤ 7.3	52	8.2 < pH ≤ 8.3	9.4
6.3 < pH ≤ 6.4	101	7.3 < pH ≤ 7.4	46	8.3 < pH ≤ 8.4	7.8
6.4 < pH ≤ 6.5	98	7.4 < pH ≤ 7.5	40	8.4 < pH ≤ 8.5	6.4
6.5 < pH ≤ 6.6	94	7.5 < pH ≤ 7.6	34	8.5 < pH ≤ 8.6	5.3
6.6 < pH ≤ 6.7	89	7.6 < pH ≤ 7.7	29	8.6 < pH ≤ 8.7	4.4
6.7 < pH ≤ 6.8	84	7.7 < pH ≤ 7.8	24	8.7 < pH ≤ 8.8	3.7
6.8 < pH ≤ 6.9	78	7.8 < pH ≤ 7.9	20	8.8 < pH ≤ 8.9	3.1
6.9 < pH ≤ 7.0	72	7.9 < pH ≤ 8.0	17	8.9 < pH ≤ 9.0	2.6

Weekly and Monthly Average Limits based on Chronic Toxicity Criteria (CTC)
Weekly average and monthly average limits for ammonia nitrogen are based on chronic toxicity criteria in ch. NR 105, Wis. Adm. Code.

The 30-day chronic toxicity criterion (CTC) for ammonia in waters classified as Cold-Water Community is calculated by the following equation, according to subchapter IV of NR 106, Wis. Adm. Code.

$$CTC = E \times \{[0.0676 \div (1 + 10^{(7.688 - pH)})] + [2.912 \div (1 + 10^{(pH - 7.688)})]\} \times C$$

Where:

pH = the pH (s.u.) of the receiving water,
E =0.854,
C =the minimum of 2.85 or $1.45 \times 10^{(0.028 \times (25 - T))}$,
T = the temperature (°C) of the receiving water

The 4-day criterion is equal to the 30-day criterion multiplied by 2.5. The 4-day criteria are used in a mass-balance equation with the 7-Q_{10} (4-Q_3, if available) to derive weekly average limitations. The 30-day criteria are used with the 30-Q_5 (estimated as 85% of the 7-Q_2 if the 30-Q_5 is not available) to derive monthly average limitations. The stream flow value is further adjusted to temperature; 100% of the flow is used if the Temperature ≥ 16 °C, 25% of the flow is used if the Temperature < 11 °C, and 50% of the flow is used if the Temperature ≥ 11 °C but < 16 °C.

The "default" basin assumed values are used for Temperature and background ammonia concentrations, because minimum ambient data is available. The pH values are from the Little La Crosse River. These values are shown in the table below, with the resulting criteria and effluent limitations.

Weekly and Monthly Ammonia Nitrogen Limits – CW

		May - October	November - April
Effluent Flow	Qe (MGD)	0.12	0.12
Background Information	7-Q_{10} (cfs)	2.8	2.8
	7-Q_2 (cfs)	4.1	4.1
	Ammonia (mg/L)	0.07	0.12
	Average Temperature (°C)	15	4
	Maximum Temperature (°C)	18	8.3
	pH (s.u.)	8.06	7.95
	% of Flow used	50	25
	Reference Weekly Flow (cfs)	1.4	0.7
	Reference Monthly Flow (cfs)	1.7425	0.87125
Criteria mg/L	4-day Chronic	4.45	6.53
	30-day Chronic	1.78	2.61
Effluent Limits mg/L	Weekly Average	37	31
	Monthly Average	18	14

Effluent Data

The following table evaluates the statistics based upon ammonia data reported from April 2021 to August 2026.

Ammonia Nitrogen Effluent Data

	Ammonia Nitrogen mg/L
1-day P_{99}	9.693
4-day P_{99}	5.982
30-day P_{99}	2.498
Mean	0.959
Std	2.526
Sample size	564
Range	0.022 - 30.444

Reasonable Potential

The need to include ammonia limits in the permit is determined by calculating 99th upper percentile (or P_{99}) values for ammonia and comparing those to the calculated limits. Based on this comparison, there is no reasonable potential for the discharge to exceed any of the calculated ammonia nitrogen limits. However, since the permit currently has weekly and monthly limits, **the limits must be retained regardless of reasonable potential**, consistent with s. NR 106.33(1)(b), Wis. Adm. Code:

> (b) If a permittee is subject to an ammonia limitation in an existing permit, the limitation shall be included in any reissued permit. Ammonia limitations shall be included in the permit if the permitted facility will be providing treatment for ammonia discharges.

Conclusions and Recommendations
In summary, after rounding to two significant figures, the following ammonia nitrogen limitations are recommended to continue. No mass limitations are recommended in accordance with s. NR 106.32(5), Wis. Adm Code.

Final Ammonia Nitrogen Limits

	Weekly Average mg/L	Monthly Average mg/L
May - October	18	8.6
November - April	17	7.8

PART 4 – WATER QUALITY-BASED EFFLUENT LIMITATIONS FOR BACTERIA

On May 1, 2020, revisions to chs. NR 102 and NR 210, Wis. Adm. Codes, became effective which replace fecal coliform limits with new *Escherichia coli (E. coli)* limits for protection of recreational uses. Section NR 210.06(2)(a)1, Wis. Adm. Code, includes two limits which must be included in permits for facilities which are required to disinfect:

1. The geometric mean of *E. coli* bacteria in effluent samples collected in any calendar month may not exceed 126 counts/100 mL.
2. No more than 10 percent of *E. coli* bacteria samples collected in any calendar month may exceed 410 counts/100 mL

E. coli monitoring is recommended at the same frequency that fecal coliform monitoring is required in the current permit. Because the Cashton Wastewater Treatment Facility permit requires weekly monitoring, the 410 counts/100 mL limit will effectively function as a daily maximum limit unless the facility performs additional monitoring. Any additional monitoring beyond what is required by the permit must also be reported on the DMR as required in the standard requirements section of the permit.

These limits are required during May through September. No changes are recommended to the current recreational period and the required disinfection season.

Effluent Data
The Cashton Wastewater Treatment Facility has monitored effluent *E. coli* from May 2021 to August 2026 and a total of 194 results are available. A geometric mean of 126 counts/100 mL was never exceeded. Effluent data never exceeded 410 counts/100 mL. The maximum reported value was 61 counts/100 mL.

PART 5 – PHOSPHORUS

Technology-Based Effluent Limit
Subchapter II of Chapter NR 217, Wis. Adm. Code, requires municipal wastewater treatment facilities that discharge greater than 150 pounds of total phosphorus per month to comply with a monthly average limit of 1.0 mg/L, or an approved alternative concentration limit.

Because the Cashton Wastewater Treatment Facility does not currently have an existing technology-based limit, the need for this limit in the reissued permit is evaluated. The data demonstrates that the annual monthly average phosphorus loading is less than 150 lbs/month, which is the threshold for municipalities in accordance to s. NR 217.04(1)(a)1, Wis. Adm. Code, and therefore **a technology-based limit is not required.**

Annual Average Mass Total Phosphorus Loading

Month	Monthly Avg. mg/L	Total Flow MG/month	Total Phosphorus lb./mo.
September 2025	3.31	2.483	68.52
October 2025	3.74	2.296	71.56
November 2025	3.31	2.084	57.48
December 2025	4.07	2.166	73.55
January 2026	3.46	2.98	85.87
February 2026	2.84	2.347	55.55
March 2026	2.81	3.83	89.67
April 2026	2.28	5.849	110.99
May 2026	3.57	2.396	71.39
June 2026	3.52	2.701	79.33
July 2026	3.52	3.94	115.51
August 2026	4.17	2.296	79.87
		Average =	79.94

Total P (lbs/month) = Monthly average (mg/L) × total flow (MG/month) × 8.34 (lbs/gallon)
Where total flow is the sum of the actual flow (MGD) for that month

In addition, the need for a WQBEL for phosphorus must be considered.

Water Quality-Based Effluent Limits (WQBEL)
Revisions to administrative rules regulating phosphorus took effect on December 1, 2010. These rule revisions include additions to s. NR 102.06, Wis. Adm. Code, which establish phosphorus standards for surface waters. Subchapter III of NR 217, Wis. Adm. Code, establishes procedures for determining WQBELs for phosphorus, based on the applicable standards in ch. NR 102, Wis. Adm. Code.

Section NR 102.06(3)(a), Wis. Adm. Code, specifically names river segments for which a phosphorus criterion of 0.100 mg/L applies. For other stream segments that are not specified in s. NR 102.06(3)(a), Wis. Adm. Code, s. NR 102.06(3)(b), Wis. Adm. Code, specifies a phosphorus criterion of 0.075 mg/L. The phosphorus criterion of 0.075 mg/L applies for the Little La Crosse River.

The conservation of mass equation is described in s. NR 217.13(2)(a), Wis. Adm. Code, for phosphorus WQBELs and includes variables of water quality criterion (WQC), receiving water flow rate (Qs), effluent flow rate (Qe), and upstream phosphorus concentrations (Cs) provided below.

$$\text{Limitation} = [(WQC)(Qs+(1-f)\ Qe) - (Qs-f\ Qe)\ (Cs)]/Qe$$

Where:

WQC = 0.075 mg/L for the Little La Crosse River
Qs = 100% of the 7-Q_2 of 4.1 cfs
Cs = background concentration of phosphorus in the receiving water pursuant to s. NR 217.13(2)(d), Wis. Adm. Code
Qe = effluent flow rate = 0.12 MGD = 0.19 cfs
f = the fraction of effluent withdrawn from the receiving water = 0

Section NR 217.13(2)(d), Wis. Adm. Code, specifies that the background phosphorus concentration used in the limit calculation formula shall be calculated as a median using the procedures specified in s. NR 102.07(1)(b) to (c), Wis. Adm. Code. All representative data from the most recent 5 years shall be used, but data from the most recent 10 years may be used if representative of current conditions

Total Phosphorus Background Data

SWIMS ID	423022	423068	423220
Station Name	Little La Crosse River - Mascot Ave Melvina	Little La Crosse River at Icebox Rd	Little La Crosse River - Near Leon WI
Waterbody	Little La Crosse River	Little La Crosse River	Little La Crosse River
Sample Count	6	6	6
First Sample	05/23/2022	05/23/2022	05/22/2002
Last Sample	10/24/2022	10/24/2022	10/15/2002
Mean	0.086	0.149	0.088
Median	0.091	0.137	0.084
NR 217 Median	0.091	0.137	

Substituting a background concentration above criteria into the limit calculation equation above would result in a calculated limit that is less than the applicable criterion of 0.075 mg/L. However, s. NR 217.13(7), Wis. Adm. Code, specifies that "if the WQBEL calculated pursuant to the procedures in this section is less than the phosphorus criterion specified in s. NR 102.06, Wis. Adm. Code, for the water body, the effluent limit shall be set equal to the criterion."

The impaired water listing of the Little La Crosse River also indicates that effluent phosphorus limits equal to the water quality criterion are needed to prevent the discharge from contributing to further impairment of the receiving water. *The Guidance for Implementing Wisconsin's Phosphorus Water Quality Standards for Point Source Discharges (2020)* suggests setting effluent limits equal to the criterion in the absence of an EPA approved total maximum daily load for phosphorus discharges to phosphorus impaired waters.

Effluent Data
The following table summarizes effluent total phosphorus monitoring data from April 2021 to August 2026.

Total Phosphorus Effluent Data

	Phosphorus mg/L
1-day P_{99}	9.28
4-day P_{99}	5.54
30-day P_{99}	3.65
Mean	2.80
Std	1.81
Sample size	564
Range	0.092 - 12.992

Reasonable Potential Determination
The discharge has reasonable potential to cause or contribute to an exceedance of the water quality criterion because the 30-day P_{99} of reported effluent total phosphorus data is greater than the calculated WQBEL. Therefore, **a WQBEL is required.**

Limit Expression
According to s. NR 217.14(2), Wis. Adm. Code, because the calculated WQBEL is less than or equal to 0.3 mg/L, the effluent limit of 0.075 mg/L may be expressed as a six-month average. If a concentration limitation expressed as a six-month average is included in the permit, a monthly average concentration limitation of 0.225 mg/L, equal to three times the WQBEL calculated under s. NR 217.13, Wis. Adm. Code shall also be included in the permit. The six-month average should be averaged during the months of May – October and November – April.

Mass Limits
A mass limit is also required, pursuant to s. NR 217.14(1)(a), Wis. Adm. Code, because the discharge is to a phosphorus impaired water. **This final mass limit shall be 0.075 mg/L × 8.34 × 0.12 MGD = 0.076 lbs/day expressed as a six-month average.**

Water Quality Trading Minimum Control Level
The Cashton Wastewater Treatment Facility has indicated interest in utilizing Water Quality Trading (WQT) as an alternative compliance option to offset any total phosphorus discharged from Outfall 004 that exceed the phosphorus WQBELs. The phosphorus WQBELs may be expressed as computed compliance limits, but a Minimum Control Level (MCL) must be set as a limit not to be exceeded at the outfall location. Therefore, the 4-day P_{99} of **5.5 mg/L is recommended during the reissued permit term to serve as the MCL.**

PART 6 – WATER QUALITY-BASED EFFLUENT LIMITATIONS FOR THERMAL

Surface water quality standards for temperature took effect on October 1, 2010. These regulations are detailed in chs. NR 102 (Subchapter II – Water Quality Standards for Temperature) and NR 106 (Subchapter V – Effluent Limitations for Temperature) of the Wisconsin Administrative Code. Daily maximum and weekly average temperature criteria are available for the 12 different months of the year depending on the receiving water classification.

In accordance with s. NR 106.53(2)(b), Wis. Adm. Code, the highest daily maximum flow rate for a calendar month is used to determine the acute (daily maximum) effluent limitation. In accordance with s. NR 106.53(2)(c), Wis. Adm. Code, the highest 7-day rolling average flow rate for a calendar month is used to determine the sub-lethal (weekly average) effluent limitation. These values were based off actual flow reported from April 2021 to August 2026.

The table below summarizes the maximum temperatures reported during monitoring from January 2025 to December 2025.

Monthly Temperature Effluent Data & Limits

Month	Representative Highest Monthly Effluent Temperature		Calculated Effluent Limit	
	Weekly Average (°F)	Daily Maximum (°F)	Weekly Average Effluent Limitation (°F)	Daily Maximum Effluent Limitation (°F)
JAN	46	46	80	112
FEB	43	43	88	120
MAR	46	46	81	108
APR	48	48	72	89
MAY	55	55	80	86
JUN	63	65	74	83
JUL	67	68	72	79
AUG	69	69	68	80
SEP	66	67	70	97
OCT	64	64	70	117
NOV	56	57	77	120
DEC	47	49	95	120

Reasonable Potential
Permit limits for temperature are recommended based on the procedures in s. NR 106.56, Wis. Adm. Code.

- An acute limit for temperature is recommended for each month in which the representative daily maximum effluent temperature for that month exceeds the acute WQBEL. The representative daily maximum effluent temperature is the greater of the following:
  (a) The highest recorded representative daily maximum effluent temperature.
  (b) The projected 99th percentile of all representative daily maximum effluent temperatures.

- A sub−lethal limitation for temperature is recommended for each month in which the representative weekly average effluent temperature for that month exceeds the weekly average WQBEL. The representative weekly average effluent temperature is the greater of the following:
  (a) The highest weekly average effluent temperature for the month.
  (b) The projected 99th percentile of all representative weekly average effluent temperatures for the month.

Comparing the representative highest effluent temperature to the calculated effluent limits determines the reasonable potential of exceeding the effluent limits. The months in which limitations are recommended are shown in bold. Based on this analysis, weekly average temperature limits are needed for August.

The Village of Cashton has submitted a request for consideration of dissipative cooling, referencing a previous dissipative cooling study and a statement that there have not been substantial changes to the facility. Based on this information, the department has found that it is not necessary to include temperature limits in the reissued permit. **Temperature monitoring is recommended** per the requirements of s. NR 106.59(7), Wis. Adm. Code.

Future WPDES Permit Reissuance
Dissipative cooling (DC) requests must be re-evaluated every permit reissuance. The permittee is responsible for submitting an updated DC request prior to permit reissuance. Such a request must either include:

a) A statement by the permittee that there have been no substantial changes in operation of, or thermal loadings to, the treatment facility and the receiving water; or
b) New information demonstrating DC to supplement the information used in the previous DC determination. If significant changes in operation or thermal loads have occurred, additional DC data must be submitted to the Department.

PART 7 – WHOLE EFFLUENT TOXICITY (WET)

WET testing is used to measure, predict, and control the discharge of toxic materials that may be harmful to aquatic life. In WET tests, organisms are exposed to a series of effluent concentrations for a given time and effects are recorded. Decisions below related to the selection of representative data and the need for WET limits were made according to ss. NR 106.08 and 106.09, Wis. Adm. Code. WET monitoring frequency and toxicity reduction evaluation (TRE) recommendations were made using the best professional judgment of staff familiar with the discharge after consideration of the guidance in the *Whole Effluent Toxicity (WET) Program Guidance Document (2022).*

- Acute tests predict the concentration that causes lethality of aquatic organisms during a 48 to 96-hour exposure. To assure that a discharge is not acutely toxic to organisms in the receiving water, WET tests must produce a statistically valid LC50 (Lethal Concentration to 50% of the test organisms) greater than 100% effluent, according to s. NR 106.09(2)(b), Wis. Adm Code.

- Chronic tests predict the concentration that interferes with the growth or reproduction of test organisms during a seven-day exposure. To assure that a discharge is not chronically toxic to organisms in the receiving water, WET tests must produce a statistically valid IC25 (Inhibition Concentration) greater than the instream waste concentration (IWC), according to s. NR 106.09(3)(b), Wis. Adm Code. The IWC is an estimate of the proportion of effluent to total volume of water (receiving water + effluent). The **IWC of 21%** shown in the WET Checklist summary below, was calculated according to the following equation, as specified in s. NR 106.03(6), Wis. Adm Code:

$$IWC\ (as\ \%) = Q_e \div \{(1 - f)\ Q_e + Q_s\} \times 100$$

Where:

Q_e = annual average flow = 0.121 MGD = 0.187 cfs
f = fraction of the Q_e withdrawn from the receiving water = 0
Q_s = ¼ of the 7-Q_{10} = 2.8 cfs ÷ 4 = 0.7 cfs

- According to the *State of Wisconsin Aquatic Life Toxicity Testing Methods Manual*(s. NR 219.04, Table A, Wis. Adm. Code), a synthetic (standard) laboratory water may be used as the dilution water and primary control in acute WET tests, unless the use of different dilution water is approved by the Department prior to use. The primary control water must be specified in the WPDES permit. The dilution water used in chronic WET tests conducted on Outfall 004 shall be a grab sample collected from the receiving water location, upstream and out of the influence of the mixing zone and any other known discharge. The specific receiving water location must be specified in the WPDES permit.

- Shown below is a tabulation of all available WET data for Outfall 004. Efforts are made to ensure that decisions about WET monitoring and limits are made based on representative data, as specified in s. NR 106.08(3), Wis. Adm Code. Data which is not believed to be representative of the discharge was not included in reasonable potential calculations. The table below differentiates between tests used and not used when making WET determinations.

Attachment #1

WET Data History

Date Test Initiated	Acute Results LC50 %				Chronic Results IC25 %					Footnotes or Comments
	C. dubia	Fathead minnow	Pass or Fail?	Used in RP?	*C. dubia*	Fathead Minnow	Algae (IC50)	Pass or Fail?	Use in RP?	
09/24/2013	>100	>100	Pass	Yes	>100	>100		Pass	Yes	
01/05/2015	>100	>100	Pass	Yes	>100	>100		Pass	Yes	

- According to s. NR 106.08, Wis. Adm. Code, WET reasonable potential is determined by multiplying the highest toxicity value that has been measured in the effluent by a safety factor, to predict the likelihood (95% probability) of toxicity occurring in the effluent above the applicable WET limit. The safety factor used in the equation changes based on the number of toxicity detects in the dataset. The fewer detects present, the higher the safety factor, because there is more uncertainty surrounding the predicted value. **WET limits must be given, according to s. NR 106.08(6), Wis. Adm. Code, whenever the applicable Reasonable Potential equation results in a value greater than 1.0.**

  Acute Reasonable Potential = [(TUa effluent) (B)]
  Chronic Reasonable Potential = [(TUc effluent) (B)(IWC)]

According to s. NR 106.08(6)(d), Wis. Adm. Code, TUa and TUc effluent values are equal to zero whenever toxicity is not detected (i.e. when the LC50, IC25 or IC50 ≥ 100%).

Acute Reasonable Potential = 0 < 1.0, reasonable potential is not shown, and a limit is not required.
Chronic Reasonable Potential = 0 < 1.0, reasonable potential is not shown, and a limit is not required.

The WET checklist was developed to help DNR staff make recommendations regarding WET limits, monitoring, and other related permit conditions. The checklist indicates whether acute and chronic WET limits are needed, based on requirements specified in s. NR 106.08, Wis. Adm. Code. The checklist steps the user through a series of questions, assesses points based on the potential for effluent toxicity, and suggests monitoring frequencies based on points accumulated during the checklist analysis. As toxicity potential increases, more points accumulate, and more monitoring is recommended to ensure that toxicity is not occurring. A summary of the WET checklist analysis completed for this permittee is shown in the table below. Staff recommendations based on best professional judgment are provided below the summary table. For guidance related to reasonable potential and the WET checklist, see Chapter 1.3 of the WET Guidance Document: https://dnr.wisconsin.gov/topic/Wastewater/WET.html.

Attachment #1

WET Checklist Summary

	Acute	Chronic
AMZ/IWC	Not Applicable. **0 Points**	IWC = 21% **0 Points**
Historical Data	Two tests used to calculate RP. No data within last 5 years. **5 Points**	Two tests used to calculate RP. No data within last 5 years. **5 Points**
Effluent Variability	Little variability, consistent WWTF operations. **0 Points**	Same as Acute. **0 Points**
Receiving Water Classification	Cold Water (5 pts) **5 Points**	Same as Acute. **5 Points**
Chemical-Specific Data	No reasonable potential for limits based on ATC. Ammonia, arsenic, chloride, chromium (+3), copper, and zinc detected. (3 pts) Additional Compounds of Concern: None. **3 Points**	No reasonable potential for limits based on CTC. Ammonia nitrogen limit carried over from the current permit. Ammonia, arsenic, chloride, chromium (+3), copper, and zinc detected. (3 pts) Additional Compounds of Concern: None. **3 Points**
Additives	1 Water Quality Conditioner (1 pt) added. Permittee has proper P chemical SOPs in place. **1 Point**	All additives are used more frequently than once per 4 days. **1 Point**
Discharge Category	No Industrial Contributors. **0 Points**	Same as Acute. **0 Points**
Wastewater Treatment	Secondary or Better **0 Points**	Same as Acute. **0 Points**
Downstream Impacts	No impacts known. **0 Points**	Same as Acute. **0 Points**
Total Checklist Points:	**14 Points**	**14 Points**
Recommended Monitoring Frequency (from Checklist):	No WET tests needed	No WET tests needed
Limit Required?	No	No
TRE Recommended? (from Checklist)	No	No

- No WET testing is required because information related to the discharge indicates the potential for effluent toxicity is believed to be low.

Temperature limits for receiving waters with unidirectional flow

(calculation using default ambient temperature data)

							Temp Dates	Flow Dates
Facility:	Cashton WWTF		**7-Q_{10}:**	2.80	cfs			
Outfall(s):	004		**Dilution:**	25%		**Start:**	01/03/25	04/01/21
Date Prepared:	09/24/2026		**f:**	0		**End:**	12/29/25	08/31/26
Design Flow (Qe):	0.12	MGD	**Stream type:**	Cold water community				
Storm Sewer Dist.	0	ft	**Qs:Qe ratio:**	3.8	:1			
			Calculation Needed?	YES				

Month	Water Quality Criteria			Receiving Water Flow Rate (Qs)	Representative Highest Effluent Flow Rate (Qe)		f	Representative Highest Monthly Effluent Temperature		Calculated Effluent Limit	
	Ta (default)	Sub-Lethal WQC	Acute WQC		7-day Rolling Average (Qesl)	Daily Maximum Flow Rate (Qea)		Weekly Average	Daily Maximum	Weekly Average Effluent Limitation	Daily Maximum Effluent Limitation
	(°F)	(°F)	(°F)	(cfs)	(MGD)	(MGD)		(°F)	(°F)	(°F)	(°F)
JAN	35	47	68	0.70	0.166	0.343	0	46	46	80	112
FEB	36	47	68	0.70	0.121	0.243	0	43	43	88	120
MAR	39	51	69	0.70	0.183	0.344	0	46	46	81	108
APR	47	57	70	0.70	0.311	0.555	0	48	48	72	89
MAY	56	63	72	0.70	0.184	0.527	0	55	55	80	86
JUN	62	67	72	0.70	0.318	0.425	0	63	65	74	83
JUL	64	67	73	0.70	0.277	0.711	0	67	68	72	79
AUG	63	65	73	0.70	0.316	0.628	0	69	69	68	80
SEP	57	60	72	0.70	0.131	0.272	0	66	67	70	97
OCT	49	53	70	0.70	0.109	0.201	0	64	64	70	117
NOV	41	48	69	0.70	0.110	0.228	0	56	57	77	120
DEC	37	47	69	0.70	0.094	0.149	0	47	49	95	120

WISCONSIN DEPARTMENT OF NATURAL RESOURCES

Cashton WWTF



Legend:

- Surface Water Outfalls
- 24K Intermittent Streams
- 24K Streams and Rivers
- Latest Leaf Off Index
- Latest Leaf Off Imagery

Notes:



Map projection: NAD 1983 HARN Wisconsin TM

N

Map: 0 320 640 Feet
0 90 180 Meters

Service Layer Credits:
Latest Leaf Off: , DNR Detailed Feature VTL (WTM): , Outfalls & Determinations: WI DNR Bureau of Watershed Management

This map is a product generated by a DNR web mapping application.

This map is for informational purposes only and may not have been prepared for or be suitable for legal, engineering, or surveying purposes. The user is solely responsible for verifying the accuracy of information before using for any purpose. By using this product for any purpose user agrees to be bound by all disclaimers found here: https://dnr.wisconsin.gov/legal

Date Printed: 9/24/2026 9:08 AM

State of Wisconsin
DEPARTMENT OF NATURAL RESOURCES
1300 W. Clairemont Avenue
Eau Claire, WI 54701

Tony Evers, Governor
Karen Hyun, Ph.D., Secretary
Telephone 608-266-2621
Toll Free 1-888-936-7463
TTY Access via relay - 711

August 17, 2026

Derek Trescher, Village President
Cashton Wastewater Treatment Facility
723 Main St
Cashton, WI 54619

Subject: Cashton WWTF WPDES Permit #WI-0020915
Water Quality Trading Plan – CONDITIONAL CREDIT CERTIFICATION

Dear Mr. Trescher,

The Wisconsin Department of Natural Resources (department) received a final draft of the updated water quality trading plan (WQT Plan) for compliance with phosphorus effluent limits at Cashton Wastewater Treatment Facility (WWTF) on 08/05/2026. Based on department review, the final WQT Plan is in general conformance with the department Water Quality Trading Guidance and Section 283.84 of the Wisconsin Statutes. The WQT plan proposes generation of phosphorus credits via streambank stabilization with habitat features. Credits generated from approved practices result in available credit quantities shown in Table 1. These credits will be incorporated into the WPDES permit and will be used to demonstrate compliance with final phosphorus effluent limits in the reissued permit.

*In the event that the permit is not reissued prior to the expiration date, annual available TP credits listed below will be available in the subsequent year(s).

Table 1: Total Phosphorus Credits Available per WQT-2026-0023

Year	Available TP Credits Total (lbs/yr)
2026	148
2027	148
2028	148
2029	148
2030	148
2031	148*

The department conditionally certifies the WQT Plan as a basis for water quality trading during the next WPDES permit term. A condition of this certification is that prior to being implemented into the WPDES permit Cashton must enter a signed, written legal agreement with the department for the projects on village owned land. In addition, it should be noted that habitat features must be installed according to the plans, inspected and maintained as part of the WQT project or trade ratios may be adjusted accordingly.

The department has assigned the WQT plan a tracking number of WQT-2026-0023 and will be referenced as such in the draft WPDES permit. The final WQT plan will be included as part of the public notice package for permit reissuance. The draft WPDES permit will include a requirement for an annual trading report and effluent monitoring for total phosphorus. Any modifications to the WQT plan within the permit term will also require a

modification to the permit and a public notification period. Subsequent permit terms of WQT will require updated plans and will be outlined in the WPDES permit.

If you have any questions or comments, please contact me at 715-492-4323 or at jenna.monahan@wisconsin.gov

Thank you,

Jenna Monahan

Jenna Monahan, PE
Wastewater Engineer - West Central Region
Wisconsin Department of Natural Resources

e-CC: Al Erickson, DPW
Greg Lasko, Operator
Tammy Bekkum, Clerk/Treasurer
Bart Nies, Delta 3
Jordan Fure, Delta 3
Logan Hoppman, Delta 3
Logan Rubeck, WDNR
Geisa Bittencourt, WDNR
Matthew Claucherty, WDNR

WATER QUALITY TRADING PLAN – LITTLE LA CROSSE RIVER

Submitted: August 5, 2026



Village of Cashton
Wastewater Treatment Facility

WPDES Permit No. WI-0020915-11-0
26818 Market Road
Portland, WI 53594

Prepared by:

Delta 3 Engineering, Inc.

875 S Chestnut St. | Platteville, WI 53818
Phone: (608) 348-5355
mail@delta3eng.biz

www.delta3eng.biz

DELTA 3
EVERY ANGLE COVERED

Project Number: D24-032

TABLE OF CONTENTS

I. Executive Summary 1
II. Background 3
III. Location and Description of Credit Generation Sites 8
IV. Methods for Nonpoint Source Load Reduction 9
V. Trade Timeline 13
VI. Inspection Reporting 14
VII. Certification 16

Attachments

1) Notice of Intent to Conduct Water Quality Trading
2) Water Quality Trading Checklist
3) Topography Map
4) Sanitary Sewer Map
5) Wastewater Treatment Facility (WWTF) Flow Schematic
6) HUC-12 Watershed Map
7) Water Quality Trading Agreements
8) Wetland Map
9) SPARROW Model Map
10) Current State of Eroding Streambanks Documentation
11) Soils Map and Soils Testing Data
12) NRCS Streambank Erosion Estimator
13) Operation and Maintenance (O&M) Plan
14) WQT Plans and Specifications

I. Executive Summary

This Water Quality Trading Plan summarizes the Village of Cashton's (Village) plan to utilize Water Quality Trading (WQT) for compliance with the final total phosphorus limit as provided in the Wisconsin Pollutant Discharge Elimination System (WPDES) Permit #WI 0020915-11-0. The WQT Credit generation will include nonpoint source reduction of Total Phosphorus (TP) as modeled by the NRCS Streambank Erosion Estimator. Credits are then applied to the daily monitoring reports to demonstrate compliance. The Wastewater Treatment Facility (WWTF) currently treats approximately 0.086 MGD on average and discharges effluent with an average Total Phosphorus (TP) concentration of approximately 2.70 mg/L. The WWTF plans to install a chemical and biological phosphorus treatment system, as well as, offset remaining TP with WQT Credits to meet the final annual six-month average limit of 0.075 mg/L and a monthly average limit of 0.225 mg/L, which will become effective April 1, 2026.

NRCS Streambank Erosion modeling methods were used to calculate the TP credits that would be generated based on the installation of best management practices (BMPs). These credits will be used to demonstrate compliance with the final total phosphorus limit as proposed in the WPDES Permit.

As demonstrated in modeling results from Table 1.1, the WWTF has the ability to register approximately **148 credits.** The implementation of this WQT Plan will result in compliance with the final TP limits. The WWTF intends to monitor TP credit usage and intends to perform construction of additional BMPs as needed for future effluent TP to comply with WPDES Permits Limits. A new Water Quality Trading Plan will be submitted at that time for new BMP practices and credit production.

Table 1.1 – Modeling Results

Property Owner	ID	Lateral Recession Rate (ft/yr.)	Current Phosphorus Loading (lbs./yr.)	Proposed Phosphorus Loading (lbs./yr.)	Proposed Phosphorus Reductions (lbs./yr.)	Trade Ratio	Proposed Phosphorus Credits
Village of Cashton	1	0.43	25	0	25	2.04:1	12
	2	0.40	77	0	77	2.04:1	38
	3	1.73	104	0	104	2.04:1	51
	4	0.41	21	0	21	2.04:1	10
Melvina Township	1	3.80	27	0	27	2:1	13
Brueggen	1	0.68	14	0	14	2.07:1	7
	2	0.50	12	0	12	2.07:1	6
	3	0.50	22	0	22	2.07:1	11
						Total	**148**

NOTE:

Trade Ratio = (Delivery + Downstream + Equivalency + Uncertainty: Habitat Adjustment):1

Delivery Factor = (1 / *Delivery Fraction*) – 1

Delivery Fraction = 1 – ((user del_frac – generator del_frac) / user del_frac)

Delivery Factor: Village of Cashton Site = 0.04

Delivery Factor: Melvina Township Site = 0

Delivery Factor: Brueggen Site = 0.07

Downstream = 0 (For trades upstream of Outfall 001)

Equivalency = 0 (Not necessary of Total Phosphorus)

Uncertainty: *Streambank Stabilization with Habitat Restoration* = 2

II. **Background**

The purpose of this Water Quality Trading Plan (Plan) is to describe the Village's use of Water Quality Trading to comply with the total phosphorus limits as provided in the Village's WPDES Permit # WI-0020915-11-0. The Plan was developed following the Notice of Intent to Conduct Water Quality Trading, provided in Attachment #1. The Water Quality Trading Checklist Form 3400-208 is provided in Attachment #2.

The Village of Cashton (Village) is located is located in Monroe County along Wisconsin State Trunk Highways '27' and '33' in west central Wisconsin. The Village operates and maintains public wastewater and water systems for the Village of Cashton and the Village of Melvina. The WWTF currently serves a population of approximately 1,251 residents.

The Village of Cashton is comprised primarily of commercial and residential development with one (1) major industrial user. The Village of Melvina is composed primarily of residential development with limited commercial development. The area is comprised of rolling hills with the grade sloping between 1% and 15%. The topography of the area is shown in Attachment #3.

The existing sanitary sewer collection within the village consists of approximately 194 sanitary manholes; 46,240 feet of eight-inch (8") sanitary sewer; and 2,855 feet of twelve-inch (12") sanitary sewer, six (6) lift stations are utilized throughout the system, along with approximately 4,940 feet of four-inch (4") sanitary force main and 1,928 feet of six-inch (6") sanitary force main to assist with the delivery of wastewater to the old treatment facility location where wastewater is then pumped along S.T.H '27' to the current WWTF constructed in 2010. Please refer to Attachment #4 – Sanitary Sewer Map for location of sanitary sewer collection system components.

The Village of Cashton owns and operates a WWTF that utilizes an anoxic/aerobic (A/A) treatment system. The facility consists of a fine mechanical screen followed by an anoxic selector basin. Wastewater then enters the extended aeration oxidation ditch with brush aerators. Following the oxidation ditch, activated sludge is settled in a final clarifier. The effluent is then passed through ultraviolet disinfection system seasonally prior to discharge to the Little La Crosse River. Activated Sludge from the final clarifier is either returned to the A/A system as return activated sludge (RAS) or wasted to the anaerobic sludge holding as waste active sludge (WAS). Sludge from the sludge storage tank is dewatered by a vertical screw press and stored as cake sludge in a covered building prior to land application. No chemicals are currently used at the treatment facility for the removal of Phosphorus. The current WWTF has a design flow of 0.121 MGD. Please see Attachment #5 for the WWTF flow schematic.

The monthly average influent and effluent flows and loadings at the WWTF for 2021, 2022, 2023, and 2024 are provided in Table 2.1, Table 2.2, Table 2.3, and Table 2.4, respectively. An annual average summary table is provided in Table 2.5.

Table 2.1 – 2021 Monthly Averages

Month	Flow	BOD_5		Suspended Solids		Total Phosphorus		Total Phosphorus
	(MGD)	(mg/L)		(mg/L)		(mg/L)		(lbs./day)
	Effluent	Influent	Effluent	Influent	Effluent	Influent	Effluent	Effluent
Jan. ('21)	0.072	199	4	260	4	-	4.11	2.47
Feb. ('21)	0.072	198	4	292	3	-	4.52	2.71
Mar. ('21)	0.103	169	4	177	3	-	3.97	3.41
Apr. ('21)	0.072	252	4	215	3	-	2.05	1.23
May ('21)	0.095	235	3	204	2	-	3.12	2.47
June ('21)	0.076	268	3	211	2	-	5.69	3.61
July ('21)	0.105	210	3	169	4	-	4.81	4.21
Aug. ('21)	0.137	163	3	177	3	-	4.48	5.12
Sept. ('21)	0.070	213	3	135	2	-	1.04	0.61
Oct. ('21)	0.069	220	3	200	3	-	0.52	0.3
Nov. ('21)	0.068	244	3	247	4	-	0.28	0.16
Dec. ('21)	0.073	269	3	188	4	-	0.57	0.35
Annual Average =	**0.084**	**220**	**3**	**206**	**3**	**-**	**2.93**	**2.22**

Table 2.2 – 2022 Monthly Averages

Month	Flow	BOD_5		Suspended Solids		Total Phosphorus		Total Phosphorus
	(MGD)	(mg/L)		(mg/L)		(mg/L)		(lbs./day)
	Effluent	Influent	Effluent	Influent	Effluent	Influent	Effluent	Effluent
Jan. ('22)	0.073	222	4	198	4	-	1.1	0.67
Feb. ('22)	0.075	278	3	241	4	-	0.57	0.36
Mar. ('22)	0.103	217	3	185	3	-	0.61	0.52
Apr. ('22)	0.107	179	4	154	2	-	0.33	0.29
May ('22)	0.104	161	4	194	3	-	0.39	0.34
June ('22)	0.087	187	4	172	4	-	1.75	1.27
July ('22)	0.063	213	3	171	3	-	4.29	2.25
Aug. ('22)	0.075	187	3	197	3	-	3.89	2.43
Sept. ('22)	0.069	209	3	209	3	-	2.13	1.23
Oct. ('22)	0.065	255	3	187	3	-	1.39	0.75
Nov. ('22)	0.078	229	3	166	3	-	0.47	0.31
Dec. ('22)	0.077	202	3	176	2	-	0.47	0.3
Annual Average =	**0.081**	**212**	**3**	**188**	**3**	**-**	**1.45**	**0.89**

Table 2.3 – 2023 Monthly Averages

Month	Flow	BOD_5		Suspended Solids		Total Phosphorus		Total Phosphorus
	(MGD)	(mg/L)		(mg/L)		(mg/L)		(lbs./day)
	Effluent	Influent	Effluent	Influent	Effluent	Influent	Effluent	Effluent
Jan. (’23)	0.081	198	4	154	3	-	0.66	0.49
Feb. (’23)	0.096	216	3	180	3	-	0.29	0.29
Mar. (’23)	0.130	177	3	152	3	-	0.77	0.74
Apr. (’23)	0.155	159	3	147	4	-	3.25	3.99
May (’23)	0.080	212	3	203	2	-	2.79	1.82
June (’23)	0.065	214	3	198	2	-	4.73	2.54
July (’23)	0.066	177	4	212	4	-	4.04	2.33
Aug. (’23)	0.070	195	3	205	2	-	5.79	3.68
Sept. (’23)	0.091	174	3	177	2	-	3.8	2.98
Oct. (’23)	0.092	217	4	182	3	-	3.14	2.34
Nov. (’23)	0.081	186	4	116	3	-	2.45	1.69
Dec. (’23)	0.081	179	4	147	3	-	4.59	3.05
Annual Average =	**0.091**	**192**	**3**	**173**	**3**	**-**	**3.03**	**2.16**

Table 2.4 – 2024 Monthly Averages

Month	Flow	BOD_5		Suspended Solids		Total Phosphorus		Total Phosphorus
	(MGD)	(mg/L)		(mg/L)		(mg/L)		(lbs./day)
	Effluent	Influent	Effluent	Influent	Effluent	Influent	Effluent	Effluent
Jan. (’24)	0.083	159	4	144	3	-	3.12	2.16
Feb. (’24)	0.089	194	4	128	3	-	3.43	2.46
Mar. (’24)	0.086	205	4	166	3	-	3.92	3.11
Apr. (’24)	0.103	218	4	147	2	-	2.80	2.19
May (’24)	0.116	231	4	177	3	-	3.55	4.03
June (’24)	0.090	277	3	147	2	-	3.48	2.18
July (’24)	0.131	236	4	166	4	-	2.71	3.13
Aug. (’24)	0.070	272	4	157	3	-	2.94	1.73
Sept. (’24)	0.073	314	3	192	4	-	3.42	2.06
Oct. (’24)	0.067	323	4	214	3	-	4.14	2.33
Nov. (’24)	0.085	216	5	131	3	-	4.18	3.33
Dec. (’24)	0.074	292	5	160	4	-	2.76	1.53
Annual Average =	**0.089**	**245**	**4**	**161**	**3**	**-**	**3.37**	**2.52**

Table 2.5 – Annual Averages

Year	Flow (MGD) Effluent	Total Phosphorus (mg/L) Effluent	Total Phosphorus (lbs./day) Effluent
2021	0.084	2.93	2.22
2022	0.081	1.45	0.89
2023	0.091	3.03	2.16
2024	0.089	3.37	2.52
Annual Average =	**0.086**	**2.70**	**1.95**

Currently, the Village has been able to maintain an average Total Phosphorus effluent of 2.70 mg/L which is well within the WPDES interim limit of 6.1 mg/L. The Village has also implemented source reduction measures such as investigating potential TP contributors. The Village has checked with the following businesses for Phosphorus contribution and will continue its investigation of Phosphorus contributors:

1. Shower and Shine Car Wash
2. Cashton Area Schools
3. Organic Valley

During the initial evaluation of local businesses, it was determined that the Cashton Area Schools and Shower and Shine Car Wash were not major contributors of Phosphorus. Organic Valley has been using cleaning products that utilize Phosphates and has begun evaluation of alternative cleaning products.

Additionally, the Village has investigated watershed compliance alternatives such as Water Quality Trading (WQT) and Adaptive Management (AM). Stream monitoring in 2013-2014 confirmed that the little La Crosse River was an impaired water due to TP. Following discussion with the DNR and initial investigation, the Village elected to move forward with WQT. Utilizing the results from PRESTO, the watershed of the WWTF has a nonpoint source ratio of 82:18 at the point of discharge and is considered to be point-source dominated. Therefore, the Village intends to perform WQT projects upstream of the outfall but within the Village's Hydrological Unit Code – 12 (HUC-12) watershed #070400060303 as provided in Attachment #6. The Monroe County Land Conservation Department (County) had been contacted and provided potential WQT partners. Therefore, the Village approved to proceed with a WQT Plan.

Flow and loading data from 2021 through 2024 was utilized to determine credits needed. Annual effluent TP was estimated at 707 lbs. The final limit would allow annual discharge of 20 lbs. The Village would be required to offset at least 111 lbs. of effluent TP. Calculations for required WQT reductions are provided below.

1) The current annual Phosphorus loading discharged at the WWTF is calculated as follows:

   Seasonal Average Daily Flow (Q) = 0.086 MGD
   Average Phosphorus concentration = 2.70 mg/L

   0.086 MGD x 2.70 mg/L x 8.34 x 365 days/yr. = **707 lbs./yr**.

2) The proposed allowable annual Phosphorus mass limit at the WWTF is calculated as follows:

   Seasonal Average Daily Flow (Q) = 0.086 MGD
   Proposed Seasonal Phosphorus Concentration Limit = 0.075 mg/L

   0.086 MGD x 0.075 mg/L x 8.34 x 365 days/yr. = **20 lbs./yr**.

3) Reduction of Total Phosphorus required at WWTF:

   707 lbs./yr. – 20 lbs./yr. = **687 lbs./yr.**

However, the Village intends to install a chemical addition and biological phosphorus removal upgrade at the WWTF. Based on similar treatment systems, and pilot studies, the Village anticipates the WWTF will be able to reduce TP to a concentration below 0.5 mg/L on a regular basis. The expected required offset is as follows:

(0.5 - 0.075) mg/L x 0.086 MGD x 8.34 x 365 days/yr = **111 lbs/yr**

To generate the required TP credits, the Village intends to perform streambank stabilization. The Village intends to generate additional credits as a factor of safety and for future growth.

III. Location and Description of Credit Generation Sites

The Village discharges to the Little La Crosse River (Little La Crosse River Watershed, Bad Axe-La Crosse River Basin) at Outfall 001. As mentioned previously, the Village intends to perform WQT projects within the Village's HUC-12 #070400060303. The Village plans to perform streambank stabilization which will utilize grading and/or riprap to prevent the erosion of sediment from the streambanks. Projects will occur on private property and property owned by the Village of Cashton and Town of Melvina. Streambank stabilization will not only prevent sediment from entering the stream, but will also prevent phosphorus, nitrogen, and other pollutants from discharging to the Little La Crosse River. See Figure 3.1 for additional project location information.



Figure 3.1 – Project locations in relation to Outfall 001

IV. Methods for Nonpoint Source Load Reduction

A. Methods Used to Generate Load Reductions

The project location described above was inspected by a Professional Engineer and a Monroe County Soil & Water Conservation Specialist in order to identify locations of severe erosion along the project limits. Signs to identify severe erosion include but are not limited to: streambanks missing vegetation, presence of slumps and rills, tree roots extruding from the streambank, fallen trees as a result of soil being eroded from underneath the trunk. The primary method to remediate the erosion sites is to re-grade the existing streambanks for the length of the active erosion to a more stable slope of 4:1. At a 4:1 slope, streambanks with vegetation alone are generally able to inhibit erosion from flowing rivers and streams under ordinary circumstances. The use of riprap as a method to remediate the actively eroding streambanks allows us to protect the streambanks from erosion and retain a steeper slope of 3:1 because the riprap is able to absorb and deflect the energy of the flowing water. The advantage of re-grading the streambank at a steeper slope is that less material will have to be excavated and removed from the site for construction. Additionally, the use of riprap allows us keep from infringing on property lines, roadways, and agriculture fields.

The Water Quality Trading Plan identifies streambank stabilization practices that will reduce TP runoff from nonpoint sources. The Village has the ability to generate TP load reductions through streambank grading and/or rip-rap of approximately 2,015 lineal feet of streambank.

Streambank Stabilization will be performed as per NR 328 *Shore Erosion Control Structures in Navigable Waterways and* NRCS 580 *Streambank and Shoreline Protection*. Streambank shaping will eliminate the discharge of sediment to the stream. The streambank stabilization project will occur within HUC-12 #070400060303 in order to generate TP credits. Standard Plans and Specifications for the Project Sites have been provided by the County. The County will acquire all required permits and authorizations for the Projects.

To register credits, the Village has entered into trade agreements with Property Owners pursuant to *s. 283.84(1)(b), Wis. Stats*. Additionally, the Village has prepared a Water Quality Trading Agreement pursuant to *s. 283.84(1)(e), Wis. Stats.* between the Wisconsin DNR and Village of Cashton. The Water Quality Trade Agreements are provided in Attachment #7. The agreements shall be executed after approval of the Water Quality Trading Plan and prior to use of Water Quality Trading Credits.

B. History of Project Site

The Project Site is planned within the Little La Crosse River Watershed. The project location is along the Little La Crosse River on private property and property owned by the Village of Cashton and Town of Melvina. Land use consists of un-pastured agricultural crop fields and undeveloped land. The project location consists of

undeveloped wetland as indicated in Attachment #8 – Wetland Maps. No fill shall be deposited within floodplain or wetlands.

The streambanks have experienced significant erosion as the watershed has been cleared for residential and agricultural use. Residential development and agricultural practices caused long term deposition of silt within the floodplain followed by decades of stream morphology eroding a new channel through the deposition. The banks within the project location are generally outside bends of the stream which receive higher stream velocity and thus have a higher erosion potential.

The banks are bare with slumps, rills and severe vegetative overhang throughout. Severe erosion indicators such as undercuts, slumps, tree roots, and fallen trees are readily visible throughout the site. In consensus with the Monroe County Soil & Water Conservation Specialist, the erosion indicators demonstrate the lateral recession rate is Very Severe.

C. Trade Ratio

The Plan identifies trading practices that will reduce TP runoff. However, the DNR requires a trade ratio to provide a safety factor for meeting water quality standards. Trade ratios consider pollutant reductions of varying certainty, location, and type. The trade ratio was derived in accordance with Section 3.4 of the Wisconsin Department of Natural Resources' *Guidance for Implementing Water Quality Trading in WPDES Permits (Edition 2)* as follows:

Trade Ratio = (Delivery + Downstream + Equivalency + Uncertainty: Habitat Adjustment):1

Delivery Factor = (1 / *Delivery Fraction*) – 1

Delivery Fraction = 1 – ((user del_frac – generator del_frac) / user del_frac)

Delivery Factor: Village of Cashton Site = 0.04

Delivery Factor: Melvina Township Site = 0

Delivery Factor: Brueggen Site = 0.07

Downstream = 0 (For trades upstream of Outfall 001)

Equivalency = 0 (Not necessary of Total Phosphorus)

Uncertainty: *Streambank Stabilization with Habitat Restoration* = 2

A Delivery Factor is included in the trade ratio to account for phosphorus removed by natural attenuation processes and ensure trades offset a sufficient amount of phosphorus prior to the WWTF outfall. The Delivery Factor was calculated in accordance to Appendix G - Management Practices and Associated Information of the Wisconsin Department of Natural Resources *Guidance for implementing Water Quality Trading in WPDES Permits (Edition 2)* and the DNR's SPARROW Model. See Attachment #9 – SPARROW Model Map.

Per Appendix H – Management Practices and Associated Information of the Wisconsin Department of Natural Resources *Guidance for implementing Water Quality Trading in WPDES Permits (Edition 2)*, in-stream habitat structures may be installed to reduce the uncertainty factor from 3 to 2.

Habitat restoration will consist of 4 lunker rehabilitation/installations, 3 root wads, and 5 random boulders. In-stream habitat locations were determined by the County. In-stream habitats will provide the following benefits:

- Increase roughness within the channel which creates current breaks, shelter, and resting areas for aquatic organisms.
- Provide an environment beneficial for algae, macroinvertebrates, and other aquatic organisms that support aquatic food chains.
- Reduce water velocity and ability of the flow to erode and carry sediment.

D. Model Used to Derive Load Reductions

NRCS Streambank Erosion modeling methods were used to calculate the total phosphorus credits that would be generated based on the installation of BMPs. These credits will be used to demonstrate compliance with the final total phosphorus limit as proposed in the WPDES Permit. Modeling results are provided in Table 4.1.

Table 4.1 – Modeling Results

Property Owner	ID	Lateral Recession Rate (ft/yr.)	Current Phosphorus Loading (lbs./yr.)	Proposed Phosphorus Loading (lbs./yr.)	Proposed Phosphorus Reductions (lbs./yr.)	Trade Ratio	Proposed Phosphorus Credits
Village of Cashton	1	0.43	25	0	25	2.04:1	12
	2	0.40	77	0	77	2.04:1	38
	3	1.73	104	0	104	2.04:1	51
	4	0.41	21	0	21	2.04:1	10
Melvina Township	1	3.80	27	0	27	2:1	13
Brueggen	1	0.68	14	0	14	2.07:1	7
	2	0.50	12	0	12	2.07:1	6
	3	0.50	22	0	22	2.07:1	11
						Total	**148**

NOTE:

Trade Ratio = (Delivery + Downstream + Equivalency + Uncertainty: Habitat Adjustment):1

Delivery Factor = (1 / *Delivery Fraction*) – 1

Delivery Fraction = 1 – ((user del_frac – generator del_frac) / user del_frac)

Delivery Factor: Village of Cashton Site = 0.04

Delivery Factor: Melvina Township Site = 0

Delivery Factor: Brueggen Site = 0.07

Downstream = 0 (For trades upstream of Outfall 001)

Equivalency = 0 (Not necessary of Total Phosphorus)

Uncertainty: *Streambank Stabilization with Habitat Restoration* = 2

A section of the Little La Crosse River was surveyed by a licensed Professional Engineer and by a Monroe County Conservation Department for areas of erosion. Each erosion site identified was measured for average height of erosion, length of erosion, and rate of erosion. Bank heights were hand measured with a tape measure and recorded approximately every 50’ for each site. All erosion sites were categorized with

a corresponding ID. The data, narrative, and photos documenting the current state of eroding streambanks are provided in Attachment #10.

Soil testing has been completed to determine TP concentrations within the soil at each erosion site. A composite sample was gathered for each site ID. Sampling included the use of a soil sampler which pulled ¾" cores at 8" depth. Cores were taken from each soil horizon throughout the length of the eroding bank to obtain a representative soil sample for the corresponding streambank ID. Soils maps and soil testing data are provided in Attachment #11.

With the collected data, the NRCS Streambank Erosion Estimator was used to calculate TP loss from each site of the eroding streambank. The lateral recession rate of the eroding bank is a critical component for the NRCS Streambank Erosion Estimator. The erosion rate was calculated by a Monroe County Soil & Water Conservation Specialist who utilized a combination of GPS survey data and aerial images to calculate the lateral recession rate of each site. The Specialist measured the lateral erosion length difference between current and archived aerial images and divided the length over the number of years past between photographs. Supporting documentation is provided in Attachment #10. This calculated lateral recession rate is expressed in units of feet/year and is utilized to calculate TP loss from each site. The modeling data for the NRCS Streambank Erosion Estimator is available in Attachment #12. The streambank grading design will eliminate streambank erosion thus eliminating TP inputs within the Project areas.

E. Operation and Maintenance

An Operation and Maintenance (O&M) Plan is provided in Attachment #13. The O&M plan describes how the Stream Stabilization Practices will be operated and maintained. The O&M Plan also addresses response procedures for Practice Registration, BMP Inspection, Noncompliance Notification, and Notification of Trade Agreement Termination.

As previously mentioned, the Village is planning to perform streambank stabilization by implementing BMPs along the Little La Crosse River streambank. The stabilization practices will be installed and maintained per the Monroe County Land Conservation Department Plans and Specifications as provided in Attachment #14. BMPs are to follow NR 328 Shore Erosion Control Structures in Navigable Waterways and NRCS 580 Streambank and Shoreline Protection. Restoration landscaping and seeding will be installed following construction and will be closely monitored for a minimum of two (2) growing seasons to ensure the new seeding grows and erosion is not prevalent. Weeds and invasive vegetation growth will be addressed if present. The BMP will be inspected following heavy rain events at a minimum. Inspection will be used to determine appropriate actions in order to maintain the BMP for continuous and ongoing streambank stabilization and TP credit generation.

The BMPs will be inspected annually by a licensed Professional Engineer to ensure that the BMPs are functioning as intended in order to meet the requirements of this WQT Plan.

V. Trade Timeline

Schedule for Installation of the above mentioned trading practices for Total Phosphorus Credit Generation for TP compliance is provided in Table 5.1 below.

Table 5.1 – Trade Timeline

Item	Completion Timeline
Site Investigation	Summer/Fall 2024
Conceptual Design	Fall/Winter 2024
Final Design	Winter/Spring 2025
Construction Permits	Winter/Spring 2025
DNR Review of Final Design	Spring 2025
Construction of BMPs	Summer/Fall 2026
WWTF Upgrade Facility Plan	September 30, 2026
Chemical Addition Upgrade Plans & Specifications Submittal to DNR	October 31, 2026
Phosphorus Credit Registration	Fall 2026
WWTF Upgrade Plans & Specification Submittal to DNR	December 31, 2026
Use of Phosphorus Credits (Ongoing for Permit Compliance)	April 1, 2027
Construction of Chemical Addition Upgrade	April 30, 2027

Credits will be used by the Village following DNR reissuance of the WPDES Permit. Credits will continue as long as the trading practices are maintained as outlined in this WQT Plan.

VI. Inspection Reporting

A. Tracking Procedures

The Village will track credits used monthly. The Village will report credit usage to the DNR on a monthly basis in the Discharge Monitoring Reports (DMRs). The annual report will summarize the 12 months of credit usage and credit generation. The Village will report to DNR any concern that they have that may result in a need to modify the trade agreement and/or this trade plan. For example, a need to generate additional credits based on discharge.

B. Inspection

Inspection of the BMPs shall occur during construction phase to ensure they are installed per the design and meet all applicable codes and permits. Once completed, inspections of the established BMPs shall occur each month at a minimum or following heavy rain events. A licensed professional engineer will perform an annual certification to ensure the practice is performing as designed and the Village remains in compliance.

The inspection reports will include:

i. Name and contact information of the inspector
ii. Inspection Date
iii. Relevant standards set forth in the Design Plan or Operation and Maintenance Plan
iv. Vegetative and Structural Conditions of the streambanks
v. Issues identified
vi. When and how any issues identified were addressed
vii. When and how any issues identified will be addressed in the future
viii. Photos of each BMP

Inspection reports generated during each routine or after rain event inspection will be included with the Annual Water Quality Trading Report submitted by the Village to the DNR. Annual inspections by a professional engineer will typically occur in Spring. This time of year is ideal for evaluating the condition of BMPs as it follows the freeze/thaw which poses the greatest potential for changes to the BMPs. Minimal vegetation cover will allow for adequate visual inspection.

C. Management Practice Registration Form

The Village will file a completed registration form 3400-207 for Water Quality Trading Management Practice Registration separately from this Plan.

D. Annual Water Quality Trading Report Submittal

The following shall be submitted to the DNR by January 31 of each year:

i. The number of pollutant reduction credits (lbs./month) used each month of the previous year to demonstrate compliance;
ii. A summary of the annual inspection of the practice that generated any of the pollutant reduction credits used during the previous year, this inspection shall be completed by a licensed Professional Engineer;
iii. All inspection reports and site photos for each BMP;

iv. Identification of noncompliance or failure to implement any terms or conditions of this permit with respect to water quality trading that have not been reported in discharge monitoring reports;
v. A list of all noncompliance and the correction measures and timing to address the issues throughout the year; and
vi. An updated WQT plan if management practices have or will change.

E. Monthly Certification of Management Practices

Each month, the Village will certify that the BMPs are maintained and operating in a manner consistent with this Water Quality Trading Plan or provide a statement noting noncompliance with this Plan. The monthly Discharge Monitoring Report (DMR) will include the following statement as a certification of compliance when the Credit Generating Practice is operating in a manner consistent with the Plan:

> "I certify that to the best of my knowledge that the management practices identified in the approved water quality trading plan as the source of phosphorus credits is installed, established and properly maintained."

F. Notification of Failure to Generate Credits

The Village will notify DNR by telephone call to DNR's regional wastewater compliance engineer within 24 hours or next business day of becoming aware that phosphorus credits used or intended for use by Village are not being generated as outlined in this Water Quality Trading Plan.

The Village will submit a written notification within five days after the Village recognizes that the phosphorus credits are not being generated as outlined in the Trading Plan. DNR may waive the requirement for submittal for a written notice within five days and instruct the Village to submit the written notice with the next regularly scheduled monitoring report required by Village's WPDES Permit.

The written notice will contain a description of how and why the TP credits are not being generated as outlined in the Water Quality Trading Plan, the steps taken or planned to prevent reoccurrence of the identified problems and the length of time anticipated it will take to address the issue.

The Village will work to rectify the problem as laid out in the Operation and Maintenance Plans.

G. Conditions under which Management Practices May Be Inspected

Any DNR authorized officer, employee, or representative has the right to access and inspect the credit generating practice so long as the Village's trade agreement with the property owner(s) and this Water Quality Trading Plan remain in effect. Notification to the property owner prior to access is required.

VII. Certification

The undersigned hereby certifies that this Water Quality Trading Plan is accurate and correct to the best of his knowledge.

Village of Cashton Wastewater Treatment Facility

By: Greg Lasko

Greg Lasko
WWTF Operator
Village of Cashton
723 Main Street
P.O. Box 188
Cashton, WI 54619
Telephone: (608) 654-7828
Email: g.lasko@villageofcashton.org

Attachment #1

State of WisconsinDepartment of Natural Resources101 South Webster Street
Madison WI 53707-7921dnr.wi.gov

Notice of Intent to Conduct Water Quality Trading

Form 3400-206 (1/14)

Notice: Pursuant to s. 283.84, Wis. Stats., and ch. NR 217 Wis. Adm. Code, this form must be completed by any WPDES permittee that is using water quality trading as a method of complying with a permit limitation. Failure to complete this form would not result in penalties. Personal information collected will be used for administrative purposes and may be provided to requesters to the extent required by Wisconsin's Open Records Law (ss. 19.31 - 19.39, Wis. Stats.).

Applicant Information

Permittee Name	Permit Number	Facility Site Number
Village of Cashton	WI- 0020915	

Facility Address	City	State	ZIP Code
26818 Market Road	Portland	WI	53594

Project Contact Name (if applicable)	Address	City	State	ZIP Code
Jordan Fure (Delta 3 Eng.)	875 South Chestnut Street	Platteville	WI	53818

Project Name
Cashton Water Quality Trading Plan

Receiving Water Name	Parameter(s) being traded	HUC 12(s)
Little La Crosse River	Total Phosphorus	070400060303

Is the permittee in a point or nonpoint source dominated watershed? (See PRESTO results - http://dnr.wi.gov/topic/surfacewater/presto.html)

- (•) Point source dominated
- ( ) Nonpoint source dominated

Credit Generator Information

Credit generator type (select all that apply):

- [ ] Permitted Discharge (non-MS4/CAFO)
- [ ] Permitted MS4
- [ ] Permitted CAFO
- [x] Urban nonpoint source discharge
- [x] Agricultural nonpoint source discharge
- [ ] Other - Specify: _____

Are any of the credit generators in a different HUC 12 than the applicant?

- ( ) Yes; HUC 12: _____
- (•) No
- ( ) Unsure

Are any of the credit generators downstream of the applicant?

- ( ) Yes
- (•) No
- ( ) Unsure

Will a broker/exchange be used to facilitate trade?

- ( ) Yes; Name: _____
- (•) No
- ( ) Unsure

Point to Point Trades (Traditional Municipal / Industrial Discharge, MS4, CAFO)

Discharge Type	Permit Number	Name	Contact Address	Is the point source credit generator currently in compliance with their permit requirements?
( ) Traditional ( ) MS4 ( ) CAFO				( ) Yes ( ) No ( ) Unsure
( ) Traditional ( ) MS4 ( ) CAFO				( ) Yes ( ) No ( ) Unsure
( ) Traditional ( ) MS4 ( ) CAFO				( ) Yes ( ) No ( ) Unsure
( ) Traditional ( ) MS4 ( ) CAFO				( ) Yes ( ) No ( ) Unsure
( ) Traditional ( ) MS4 ( ) CAFO				( ) Yes ( ) No ( ) Unsure

Point to Nonpoint Trades (Non-permitted Agricultural, Non-Permitted Urban, etc.)

List the practices that will be used to generate credits:

Streambank Stabilization

Method for quantifying credits generated:
- ☐ Monitoring
- ☑ Modeling, Names: NRCS Streambank Erosion Estimator
- ☐ Other: _____

Projected date credits will be available:

The preparer certifies all of the following:

- I am familiar with the specifications submitted for this application, and I believe all applicable items in this checklist have been addressed.
- I have completed this document to the best of my knowledge and have not excluded pertinent information.

Signature of Preparer	Date Signed
[signature]	4-25-25

Authorized Representative Signature

I certify under penalty of law that this document and all attachments were prepared under my direction or supervision. Based on my inquiry of those persons directly responsible for gathering and entering the information, the information is, to the best of my knowledge and belief, accurate and complete. I am aware that there are significant penalties for submitting false information, including the possibility of fine and imprisonment for knowing violations.

Signature of Authorized Representative	Date Signed
[signature]	9-24-25

Attachment #2

State of Wisconsin
Department of Natural Resources
101 South Webster Street
Madison WI 53707-7921
dnr.wi.gov

Water Quality Trading Checklist

Form 3400-208 (1/14)

Notice: Pursuant to s. 283.84, Wis. Stats., this form must be completed by any WPDES permittee that intends to pursue pollutant trading as a method of complying with a permit limitation. Failure to complete this form would not result in penalties. Personal information collected will be used for administrative purposes and may be provided to requesters to the extent required by Wisconsin's Open Records Law (ss. 19.31 - 19.39, Wis. Stats.).

Applicant Information

Permittee Name	Permit Number	Facility Site Number
Village of Cashton	WI- 0020915	

Facility Address	City	State	ZIP Code
26818 Market Road	Portland	WI	53594

Project Contact Name (if applicable)	Address	City	State	ZIP Code
Jordan Fure (Delta 3 Eng.)	875 South Chestnut Street	Platteville	WI	53818

Project Name
Cashton Water Quality Trading Plan

Receiving Water Name	Parameter(s) being traded	HUC 12(s)
Little La Crosse River	Total Phosphorus	070400060303

Credit Generator Information

Credit generator type (select all that apply):

- ☐ Permitted Discharge (non-MS4CAFO)
- ☐ Permitted MS4
- ☐ Permitted CAFO
- ☒ Urban nonpoint source discharge
- ☒ Agricultural nonpoint source discharge
- ☐ Other - Specify: _____

Are any of the credit generators in a different HUC 12 than the applicant?
- ○ Yes; HUC 12: _____
- ◉ No

Are any of the credit generators downstream of the applicant?
- ○ Yes
- ◉ No

Will a broker/exchange be used to facilitate trade?
- ○ Yes *(include description and contact information in WQT plan)*
- ◉ No

Point to Point Trades (Traditional Municipal / Industrial, MS4, CAFO)

Are each of the point source credit generators identified in this section in compliance with their WDPES permit requirements?
- ○ Yes
- ○ No

Discharge Type	Permit Number	Name	Contact Information	Trade Agreement Number
○ Traditional ○ MS4 ○ CAFO				
○ Traditional ○ MS4 ○ CAFO				
○ Traditional ○ MS4 ○ CAFO				
○ Traditional ○ MS4 ○ CAFO				
○ Traditional ○ MS4 ○ CAFO				

Point to Point Trades (Traditional Municipal / Industrial, MS4, CAFO) *cont.*

Does plan have a narrative that describes:			Plan Section
a. Summary of discharge and existing treatment including optimization	◯ Yes	◯ No	
b. Amount of credit being generated	◯ Yes	◯ No	
c. Timeline for credits and agreements	◯ Yes	◯ No	
d. Method for quantifying credits	◯ Yes	◯ No	
e. Tracking and verification procedures	◯ Yes	◯ No	
f. Location of credit generator in proximity to receiving water and credit user	◯ Yes	◯ No	
g. Other: _____	◯ Yes	◯ No	

Point to Nonpoint Trades (Non-Permitted Urban, Agricultural, Other)

Discharge Type	Practices Used to Generate Credits	Method of Quantification	Trade Agreement Number	Have the practice(s) been formally registered?
◯ Urban NPS ◉ Agricultural NPS ◯ Other	Streambank Stabilization	NRCS Streambank Erosion Estimator		◯ Yes ◉ No ◯ Only in part
◯ Urban NPS ◯ Agricultural NPS ◯ Other				◯ Yes ◯ No ◯ Only in part
◯ Urban NPS ◯ Agricultural NPS ◯ Other				◯ Yes ◯ No ◯ Only in part
◯ Urban NPS ◯ Agricultural NPS ◯ Other				◯ Yes ◯ No ◯ Only in part
◯ Urban NPS ◯ Agricultural NPS ◯ Other				◯ Yes ◯ No ◯ Only in part
◯ Urban NPS ◯ Agricultural NPS ◯ Other				◯ Yes ◯ No ◯ Only in part
◯ Urban NPS ◯ Agricultural NPS ◯ Other				◯ Yes ◯ No ◯ Only in part
◯ Urban NPS ◯ Agricultural NPS ◯ Other				◯ Yes ◯ No ◯ Only in part

Does plan have a narrative that describes:			Plan Section
a. Description of existing land uses	◉ Yes	◯ No	Section IV
b. Management practices used to generate credits	◉ Yes	◯ No	Section IV
c. Amount of credit being generated	◉ Yes	◯ No	Section IV
d. Description of applicable trade ratio per agreement/management practice	◉ Yes	◯ No	Section IV
e. Location where credits will be generated	◉ Yes	◯ No	Section III
f. Timeline for credits and agreements	◉ Yes	◯ No	Section V
g. Method for quantifying credits	◉ Yes	◯ No	Section IV

Does plan have a narrative that describes:			Plan Section
h. Tracking procedures	◉ Yes	○ No	Section IV
i. Conditions under which the management practices may be inspected	◉ Yes	○ No	Section VI
j. Reporting requirements should the management practice fail	◉ Yes	○ No	Section VI
k. Operation and maintenance plan for each management practice	◉ Yes	○ No	Section IV
l. Location of credit generator in proximity to receiving water and credit user	◉ Yes	○ No	Section III
m. Practice registration documents, if available	○ Yes	◉ No	
n. History of project site(s)	◉ Yes	○ No	Section IV
o. Other: _____	○ Yes	○ No	

The preparer certifies all of the following:

- I am familiar with the specifications submitted for this application, and I believe all applicable items in this checklist have been addressed.
- I have completed this document to the best of my knowledge and have not excluded pertinent information.
- I certify that the information in this document is true to the best of my knowledge.

Signature of Preparer	Date Signed
Jordan Fine	4-25-25

Authorized Representative Signature

I certify under penalty of law that this document and all attachments were prepared under my direction or supervision. Based on my inquiry of those persons directly responsible for gathering and entering the information, the information is, to the best of my knowledge and belief, accurate and complete. I am aware that there are significant penalties for submitting false information, including the possibility of fine and imprisonment for knowing violations.

Signature of Authorized Representative	Date Signed
Doug Lesher	9-24-25

Attachment #3

WISCONSIN DEPARTMENT OF NATURAL RESOURCES

Topography Map

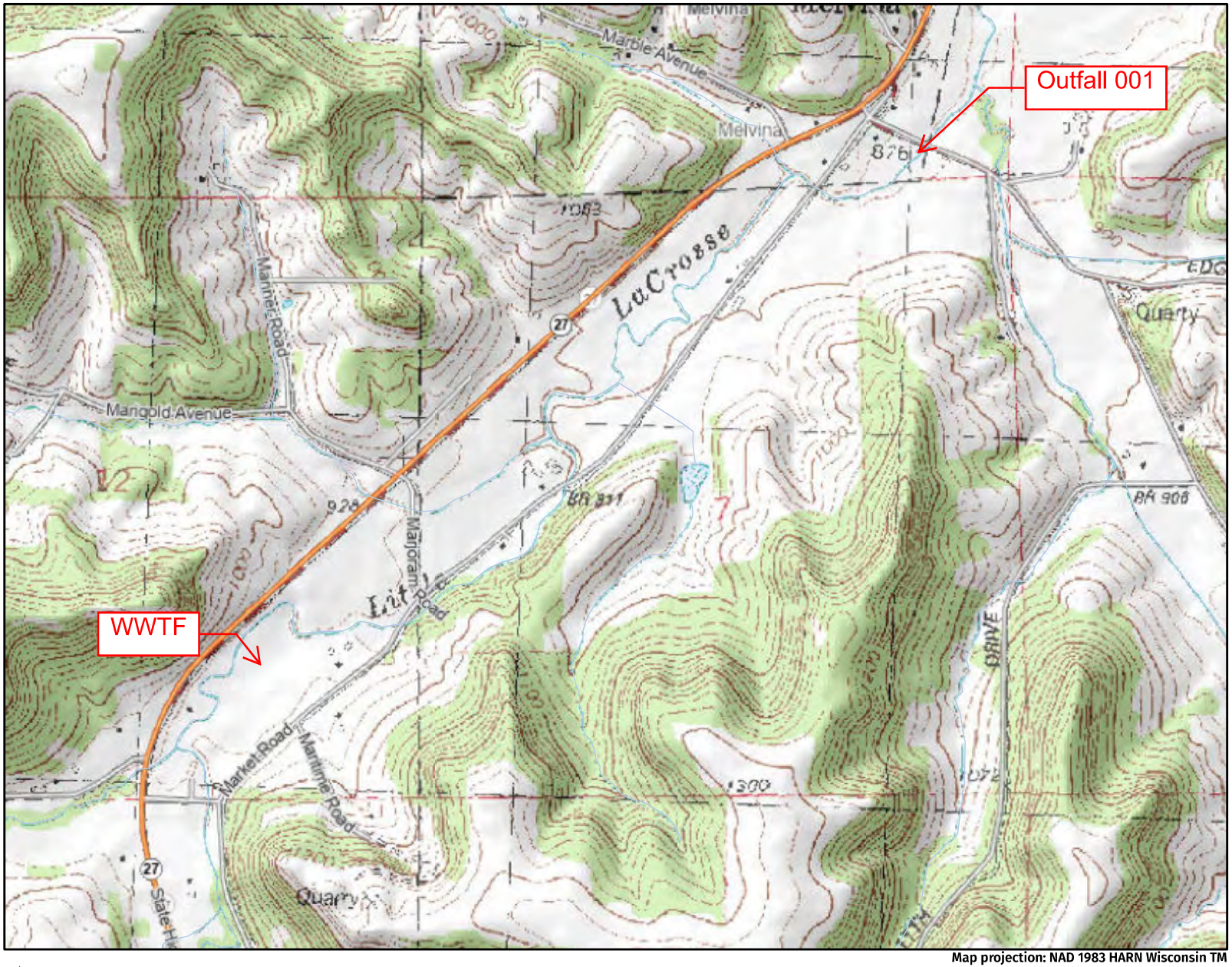

Legend: (some map layers may not be displayed)

- 24K Streams and Rivers
- City or Village
- State Boundaries
- County Boundaries

Major Roads

- Interstate Highway
- State Highway
- US Highway

County and Local Roads

- County HWY
- Local Road
- Railroads
- Tribal Lands

24K USGS DRGs

0

1

Notes:

Map projection: NAD 1983 HARN Wisconsin TM

N

Map: 0 1,000 2,000 Feet
0 350 700 Meters

Service Layer Credits:
EN Basic Basemap WTM Ext: , 2022 Leaf On: , Cities, Roads & Boundaries: , Topographic Maps:



This map is a product generated by a DNR web mapping application.

This map is for informational purposes only and may not have been prepared for or be suitable for legal, engineering, or surveying purposes. The user is solely responsible for verifying the accuracy of information before using for any purpose. By using this product for any purpose user agrees to be bound by all disclaimers found here: **https://dnr.wisconsin.gov/legal**.

Date Printed: 1/7/2025 11:19 AM

Attachment #4

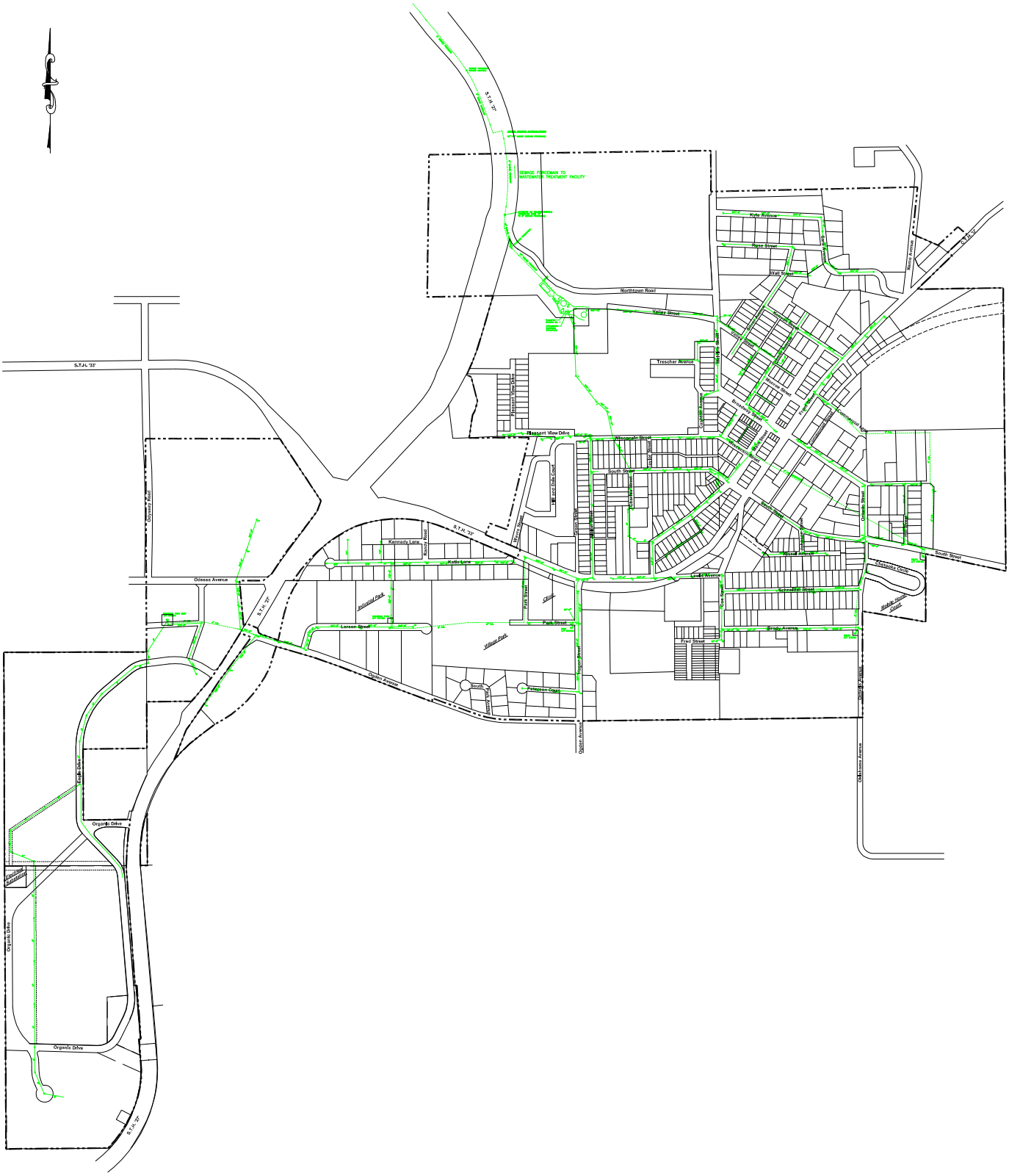

Sanitary Sewer Map
of the
Village of Cashton
Monroe County, Wisconsin

Map Revisions:

Date:	By:	Note(s):
1-9-13	L. RUFF	ADDED 8" SEWER MAIN ON ORGANIC CIRCLE UPDATED ORGANIC DRIVE RW

1" = 300'
300 0 300

DELTA 3 ENGINEERING INC
Professional Civil-Municipal & Structural Engineering
Grant Writing Land Development Planning & CADD Services
575 South Chestnut Street Phone: (608) 348-5355
Platteville, Wisconsin 53818 Fax: (608) 348-5455

Attachment #5

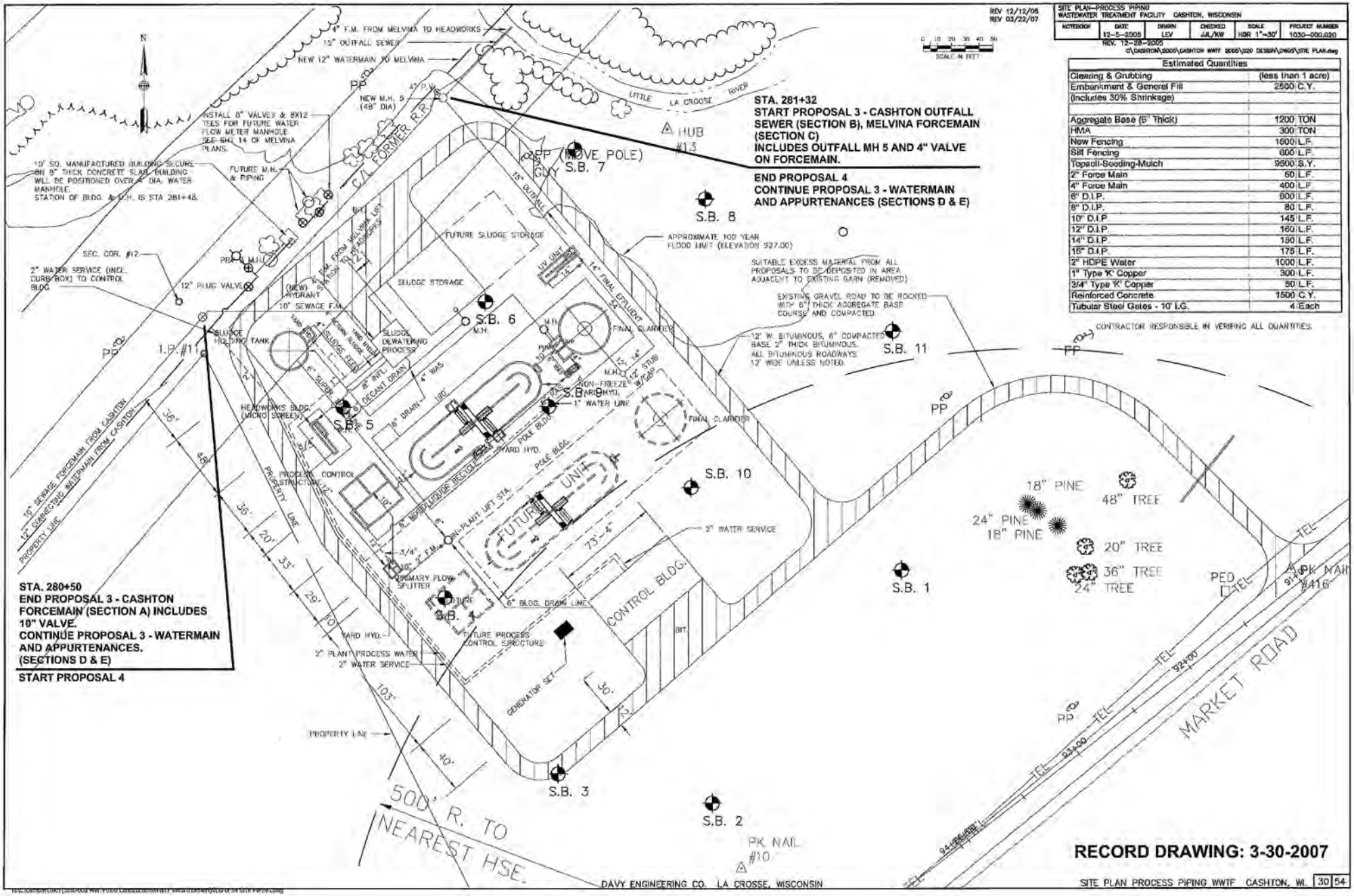
REV 12/12/06
REV 03/22/07
SITE PLAN--PROCESS PIPING
WASTEWATER TREATMENT FACILITY CASHTON, WISCONSIN
NOTEBOOK | DATE 12-5-2005 | DRAWN LSV | CHECKED JJL/KW | SCALE HOR 1"=30' | PROJECT NUMBER 1030-000.020
REV. 12-28-2005
C:\CASHTON\2005\CASHTON WWTF 2005\020 DESIGN\DWGS\SITE PLAN.dwg
SCALE IN FEET
Estimated Quantities
Clearing & Grubbing (less than 1 acre)
Embankment & General Fill 2500 C.Y.
(Includes 30% Shrinkage)
Aggregate Base (6" Thick) 1200 TON
HMA 300 TON
New Fencing 1600 L.F.
Silt Fencing 600 L.F.
Topsoil-Seeding-Mulch 9500 S.Y.
2" Force Main 50 L.F.
4" Force Main 400 L.F.
6" D.I.P. 600 L.F.
8" D.I.P. 80 L.F.
10" D.I.P 145 L.F.
12" D.I.P. 160 L.F.
14" D.I.P. 150 L.F.
15" D.I.P. 175 L.F.
2" HDPE Water 1000 L.F.
1" Type 'K' Copper 300 L.F.
3/4" Type 'K' Copper 50 L.F.
Reinforced Concrete 1500 C.Y.
Tubular Steel Gates - 10' LG. 4 Each
CONTRACTOR RESPONSIBLE IN VERIFING ALL QUANTITIES.
STA. 281+32
START PROPOSAL 3 - CASHTON OUTFALL SEWER (SECTION B), MELVINA FORCEMAIN (SECTION C)
INCLUDES OUTFALL MH 5 AND 4" VALVE ON FORCEMAIN.
END PROPOSAL 4
CONTINUE PROPOSAL 3 - WATERMAIN AND APPURTENANCES (SECTIONS D & E)
STA. 280+50
END PROPOSAL 3 - CASHTON FORCEMAIN (SECTION A) INCLUDES 10" VALVE.
CONTINUE PROPOSAL 3 - WATERMAIN AND APPURTENANCES. (SECTIONS D & E)
START PROPOSAL 4
4" F.M. FROM MELVINA TO HEADWORKS
15" OUTFALL SEWER
NEW 12" WATERMAIN TO MELVINA
NEW M.H. 5 (48" DIA)
INSTALL 6" VALVES & 8X12 TEES FOR FUTURE WATER FLOW METER MANHOLE SEE SHT. 14 OF MELVINA PLANS.
10' SQ. MANUFACTURED BUILDING SECURE ON 8" THICK CONCRETE SLAB. BUILDING WILL BE POSITIONED OVER 6" DIA. WATER MANHOLE. STATION OF BLDG. & M.H. IS STA 281+48.
FUTURE M.H. & PIPING
C/L FORMER R.R.
LITTLE LA CROSSE RIVER
HUB #13
2PP (MOVE POLE) GUY S.B. 7
S.B. 8
APPROXIMATE 100 YEAR FLOOD LIMIT (ELEVATION 927.00)
SUITABLE EXCESS MATERIAL FROM ALL PROPOSALS TO BE DEPOSITED IN AREA ADJACENT TO EXISTING BARN (REMOVED)
EXISTING GRAVEL ROAD TO BE ROCKED WITH 6" THICK AGGREGATE BASE COURSE AND COMPACTED.
12' W. BITUMINOUS, 6" COMPACTED BASE 2" THICK BITUMINOUS. ALL BITUMINOUS ROADWAYS 12' WIDE UNLESS NOTED.
S.B. 11
SEC. COR. #12
2" WATER SERVICE (INCL. CURB BOX) TO CONTROL BLDG.
12" PLUG VALVE
PROP. M.H.
(NEW) HYDRANT
10" SEWAGE F.M.
4" F.M. FROM DELAVAN LIFT STATION TO HEADWORKS
FUTURE SLUDGE STORAGE
SLUDGE STORAGE
S.B. 6
M.H.
UV UNIT
14" FINAL EFFLUENT
FINAL CLARIFIER
I.P. #11
SLUDGE HOLDING TANK
SLUDGE DEWATERING PROCESS
DECANT DRAIN
4" WAS.
HEADWORKS BLDG. (MICRO SCREEN)
S.B. 5
S.B. 9
NON-FREEZE YARD HYD.
1" WATER LINE
FINAL CLARIFIER
10" SEWAGE FORCEMAIN FROM CASHTON
12" CONNECTING WATERMAIN FROM CASHTON
PROPERTY LINE
PROCESS CONTROL STRUCTURE
6" MDPE LIQUOR RECYCLE
POLE BLDG.
YARD HYD.
S.B. 10
FUTURE UNIT
IN-PLANT LIFT STA.
2" WATER SERVICE
3/4" 2" F.M.
PRIMARY FLOW SPLITTER
FUTURE S.B. 4
6" BLDG. DRAIN LINE
CONTROL BLDG.
FUTURE PROCESS CONTROL STRUCTURE
GENERATOR SET
2" PLANT PROCESS WATER
2" WATER SERVICE
S.B. 1
18" PINE
48" TREE
24" PINE
18" PINE
20" TREE
36" TREE
24" TREE
PED
PK NAIL #16
MARKET ROAD
PROPERTY LINE
500' R. TO NEAREST HSE.
S.B. 3
S.B. 2
PK NAIL #10
DAVY ENGINEERING CO. LA CROSSE, WISCONSIN
RECORD DRAWING: 3-30-2007
SITE PLAN PROCESS PIPING WWTF CASHTON, WI. 30 54

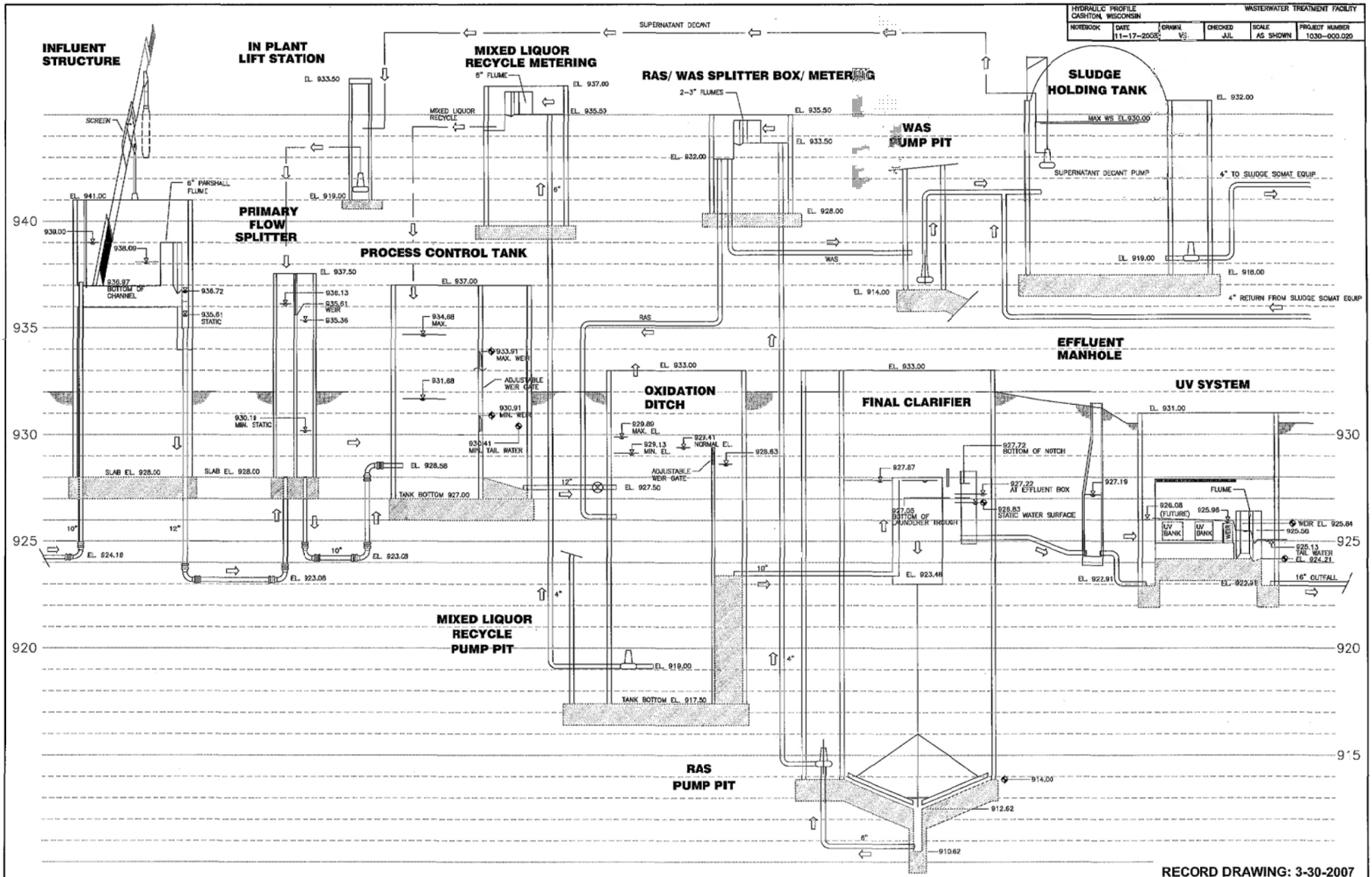
HYDRAULIC PROFILE
CASHTON, WISCONSIN
WASTEWATER TREATMENT FACILITY
NOTEBOOK
DATE 11-17-2006
DRAWN VS
CHECKED JJL
SCALE AS SHOWN
PROJECT NUMBER 1030-000.020
INFLUENT STRUCTURE
IN PLANT LIFT STATION
MIXED LIQUOR RECYCLE METERING
RAS/ WAS SPLITTER BOX/ METERING
SLUDGE HOLDING TANK
WAS PUMP PIT
PRIMARY FLOW SPLITTER
PROCESS CONTROL TANK
OXIDATION DITCH
FINAL CLARIFIER
EFFLUENT MANHOLE
UV SYSTEM
MIXED LIQUOR RECYCLE PUMP PIT
RAS PUMP PIT
SUPERNATANT DECANT
SCREEN
6" PARSHALL FLUME
5" FLUME
2-3" FLUMES
MIXED LIQUOR RECYCLE
RAS
WAS
SUPERNATANT DECANT PUMP
4" TO SLUDGE SOMAT EQUIP
4" RETURN FROM SLUDGE SOMAT EQUIP
MAX WS EL.930.00
ADJUSTABLE WEIR GATE
ADJUSTABLE WEIR GATE
TANK BOTTOM 927.00
TANK BOTTOM EL. 917.50
BOTTOM OF CHANNEL
STATIC
MAX.
MAX. WEIR
MIN. WEIR
MIN. TAIL WATER
MIN. STATIC
MAX. EL.
MIN. EL.
NORMAL EL.
BOTTOM OF NOTCH
AT EFFLUENT BOX
STATIC WATER SURFACE
BOTTOM OF LAUNDERER THROUGH
FLUME
(FUTURE)
UV BANK
UV BANK
WEIR
TAIL WATER
16" OUTFALL
SLAB EL. 928.00
SLAB EL. 928.00
EL. 941.00
EL. 939.00
EL. 938.09
EL. 936.97
EL. 936.72
EL. 935.61
EL. 933.50
EL. 919.00
EL. 937.00
EL. 935.50
EL. 933.50
EL. 932.00
EL. 928.00
EL. 914.00
EL. 937.50
EL. 936.13
EL. 935.61
EL. 935.36
EL. 934.68
EL. 933.91
EL. 931.68
EL. 930.91
EL. 930.41
EL. 928.58
EL. 927.50
EL. 933.00
EL. 933.00
EL. 929.80
EL. 929.13
EL. 928.63
EL. 927.87
EL. 927.72
EL. 927.22
EL. 927.19
EL. 926.88
EL. 926.08
EL. 925.98
EL. 925.84
EL. 925.56
EL. 925.13
EL. 924.21
EL. 923.48
EL. 922.91
EL. 922.58
EL. 924.18
EL. 923.08
EL. 923.08
EL. 923.08
EL. 919.00
EL. 914.00
EL. 912.62
EL. 910.62
EL. 931.00
EL. 932.00
EL. 919.00
EL. 918.00
930.18
930.41
927.05
926.83
925.13
925.84
925.56
924.21
922.91
922.58
914.00
912.62
910.62
940
935
930
925
920
915
10"
12"
10"
10"
12"
4"
4"
6"
6"
RECORD DRAWING: 3-30-2007
DAVY ENGINEERING CO. LA CROSSE, WISCONSIN
WWTF HYDRAULIC PROFILE CASHTON, WISCONSIN
29 54

Attachment #6

WISCONSIN DEPARTMENT OF NATURAL RESOURCES

HUC-12 Watershed Map

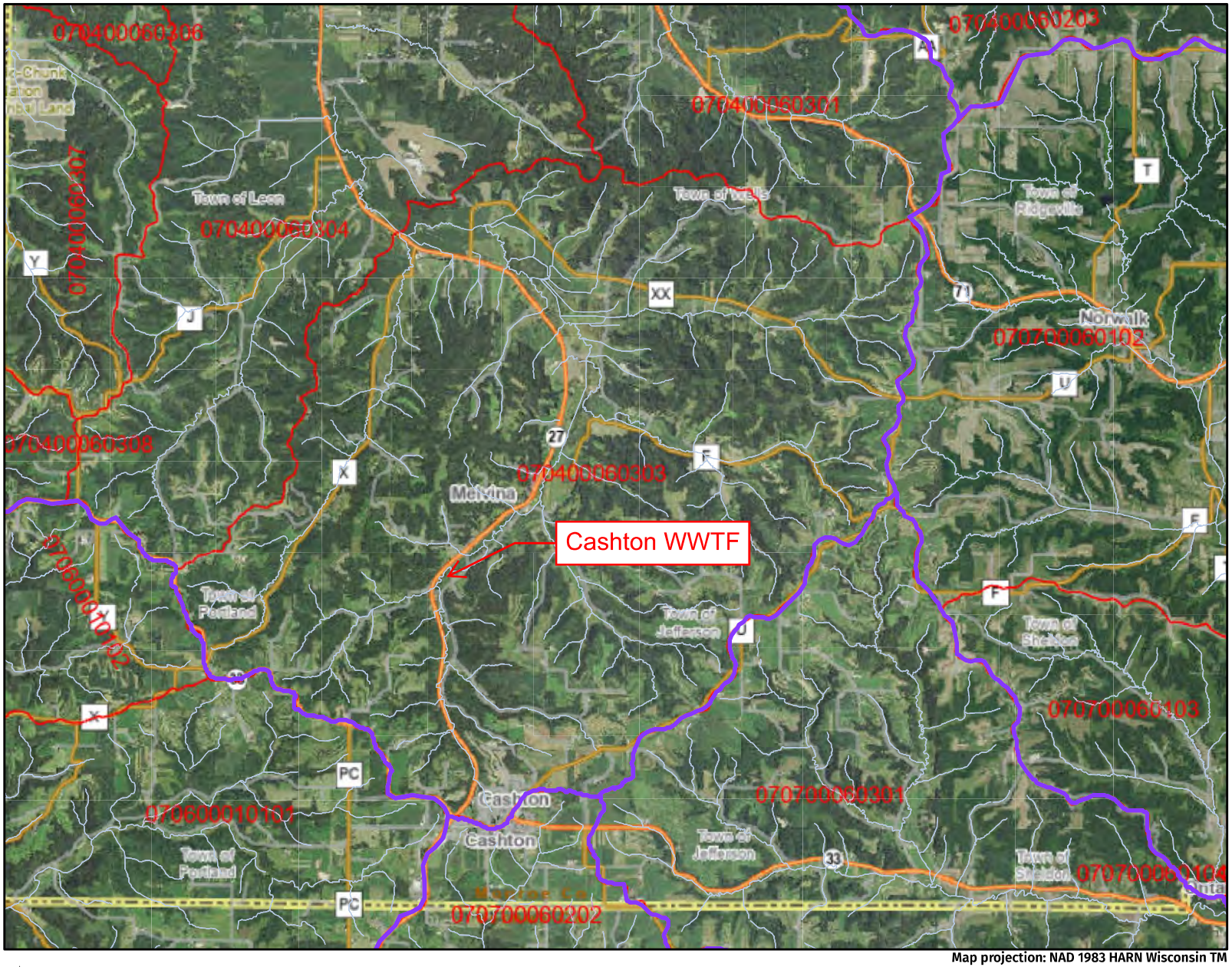

Legend: (some map layers may not be displayed)

- Watersheds
- 12-digit HUCs (Subwatersheds)
- 24K Streams and Rivers
- City or Village
- State Boundaries
- County Boundaries

Major Roads

- Interstate Highway
- State Highway
- US Highway

County and Local Roads

- County HWY
- Local Road
- Railroads
- Tribal Lands
- Latest Leaf On Imagery

Notes:



Map projection: NAD 1983 HARN Wisconsin TM

N

Map: 0 8,000 16,000 Feet
0 2,500 5,000 Meters

Service Layer Credits:
EN Basic Basemap WTM Ext: , 2022 Leaf On: , Hydrologic Units (HUCs): U. S. Department of Agriculture, Natural Resources Conservation Service, Cities, Roads & Boundaries:

This map is a product generated by a DNR web mapping application.

This map is for informational purposes only and may not have been prepared for or be suitable for legal, engineering, or surveying purposes. The user is solely responsible for verifying the accuracy of information before using for any purpose. By using this product for any purpose user agrees to be bound by all disclaimers found here: **https://dnr.wisconsin.gov/legal**.

Date Printed: 1/7/2025 11:26 AM

Attachment #7

Trade Agreement for Point to Nonpoint Source Trades

Permittee Information

Credit User Name (Permittee)
Village of Cashton

Permit Number
WI-0020915

Credit User Address
26818 Market Road
Portland, Wisconsin 53594

Permittee/Broker/Exchange Name (if applicable)

Trade Agreement Number
1

Permittee/Broker/Exchange Address (if applicable)

Street Address	Village/City/Town	State	ZIP Code

Project Name
Proposed 2025 Stream Improvements –
Little La Crosse River

Name of Credit Generator (Landowner/Operator) (Last, First, M.I.)

Street Address	Village/City/Town	State	ZIP Code

Property Information

Name of Landowner(s) (if not Operator) (Last, First, M.I.)

Street Address	Village/City/Town	State	ZIP Code

Legal Description of Property - Contiguous sites under the same ownership: (add additional sheets if necessary)

Parcel ID(s):

Site Locator for Construction Projects

County	Township	Range E / W	Section	Quarter/Quarter (e.g., NW ¼ of the NE ¼)

Agreement

The property described above is enrolled in a Water Quality Trade Agreement. This agreement commits the landowner/operator, their heirs, successors and assigns to fulfill the trade agreement until a satisfaction or release is filed by the grantee.

Appendices which describe the BMPs, costs, installation schedule, and conditions are hereby incorporated into this agreement and are on file with the grantee and may be given to Wisconsin DNR upon request by the Department.

Section A – General Requirements

1) Trade Agreement 1 (TA1) includes the following:
    a. Appendix 1: Village of Cashton Water Quality Trading Plan – Little La Crosse River
    b. Appendix 2: Village of Cashton Water Quality Trading – Little La Crosse River Plans and Specifications
2) This agreement may be amended by mutual agreement of either party, so long as the agreement has not yet expired.
3) Appendices which describe the BMPs, costs, installation schedule, and conditions are hereby incorporated into this agreement and are on file with the grantee and may be given to Wisconsin Department of Natural Resources (DNR) upon request by the DNR.
4) If the Landowner/Operator wishes to sell or lease all or portions of the properties described in the Appendices, TA1 will be binding to the new Landowner/Operator.
5) If a significant archeological or historical site is found, construction is to cease immediately and the BMP will be relocated, redesigned, or deleted to prevent damage to the archeological or historical site. The BMP may be deleted only if approved in writing by the DNR.
6) Standard inspections, maintenance, and repairs shall be performed by the Village of Cashton or Authorized Representative of the Village. Standard inspections shall be performed monthly and following any event with potential to cause damage to the Project. Maintenance and repairs will be performed as needed according to inspection findings and recommendations.
7) This agreement will commence on the date of execution. This agreement will terminate on **March 31, 2031.** At that time, the intent of this agreement would be to renegotiate agreement terms and conditions for a new agreement if Water Quality Trading Credits are still available for meeting Wisconsin Pollutant Discharge Elimination System (WPDES) Permit for the Wastewater Treatment Facility at the Village of Cashton. If the trading credits are no longer applicable, TA1 will become null and void.

Section B – Landowner/Operator Shall:

1) Grant all Trading Credits generated by the Project to the Village of Cashton.
2) Allow the Grantee, or Authorized Representative of the Grantee, access to the site for installation, operation, and maintenance.
    a. The DNR will be considered an Authorized Representative of the Grantee and will be allowed access to the Project site as required for Best Management Practice (BMP) installation inspection and Trading Credit validation.
3) Not be held liable for damages to life, limb, or property due to the installation, operation, and maintenance of the Project.
4) Not damage, disturb, prohibit, or otherwise interfere with the installation, operation, and maintenance of the Project.
5) Be allowed to perform maintenance to vegetation growing in and along the BMP at the expense of the Landowner/Operator.

Section C – Grantee Shall:

1) Obtain permits required for the installation, operation, and maintenance of the Project.
2) Meet all DNR requirements associated with the Project at the expense of the Village.
3) Design, install, operate, and maintain BMPs defined in Appendix 1 and Appendix 2 of this agreement at expense of the Village.
4) Not remove any rocks, trees, soils, or other properties, unless so agreed.
5) Repair access roads, fields, fences, landscaping, and any other areas disturbed by the installation, operation, and maintenance activities for the Project.
6) Coordinate construction activities with Landowner/Operator.
7) Perform maintenance to the BMPs as necessary to maintain Water Quality Trading Credits.

TA Number	Typed Name of Landowner/Operator	Initials of Landowner/Operator	Date
1			

ACKNOWLEDGMENT

STATE OF WISCONSIN}$_{SS}$ MONROE COUNTY }

Personally came before me this_____day of _____, 20____, the above named _____and_____to me known to be the persons who executed the foregoing instrument and acknowledge the same.

_____
*
Notary Public
Monroe County, Wisconsin
My Commission expires : _____

Water Quality Trade Agreement between
Village of Cashton and Wisconsin Department of Natural Resources

This Water Quality Trade Agreement (this "Agreement") is made by and between Village of Cashton ("Village") and the Wisconsin Department of Natural Resources ("the Department") and together "the Parties".

1. Recitals

a. Water quality trading is an alternative compliance option for Wisconsin Permit Discharge Elimination System ("WPDES") Permit holders and is authorized by Wis. Stat. § 283.84.

b. Wis. Stat. § 283.84(l)(e) provides that, "the [the Department] may authorize a person required to obtain a permit to increase the discharge of pollutants above levels that would otherwise be authorized in the permit if the person . . . reaches a binding, written agreement with [the Department] under which the person constructs a project or implements a plan that results in reducing the amount of water pollution from sources other than the source covered by the permit."

c. The Department has issued guidance regarding water quality trading, including:

1) Guidance for Implementing Wisconsin's Phosphorus Water Quality Standards for Point Source Discharges, No. 3400-2020-12, (Edition 3, June 1, 2020);

2) Guidance for Implementing Water Quality Trading in WPDES Permits, No. 3200-3400-3800-2020-03 (June 1, 2020).

d. The Village submitted a Permit application for issuance of a WPDES Permit on September 22, 2025. The Permit is for a wastewater discharge from its facility located in Portland, Wisconsin.

e. The WPDES Permit will contain phosphorus water quality based effluent limits ("WQBELs") for Outfall 001, which is located in HUC-12 subwatershed 070400060303.

f. The Village owns and will implement streambank stabilization practices and habitat features within the same hydrologic region as Outfall 001.

g. The descriptions of the lands that include streambank stabilization and habitat features are on private property and property owned by the Village of Cashton and Melvina Township at the following locations:

- Private Property – Little La Crosse River
  - Parcel #032-00247-0000
  - Parcel #032-00258-0000
- Village of Cashton – Little La Crosse River
  - Parcel #032-00241-2000
  - Parcel #032-00247-2000
- Melvina Township – Little La Crosse River
  - Parcel #151-00057-0000

The Village submitted to the Department a Water Quality Trading Plan (WQT Plan) under which the Village will install streambank stabilization and habitat features to reduce pollution to surface waters of the State.

h. The management practices will be installed and maintained relative to the NRCS Conservation Practice Standard listed below in Table One:

Table One – Conservation Practice Standards

NRCS Conservation Practice Standard	Number
Streambank and Shoreline Protection	580
Stream Habitat Improvement and Management	395

i. The WQT Plan includes an Establishment Plan and an Operation and Maintenance Plan for the streambank stabilization and habitat features.

2. Agreement Terms

a. The Village shall establish streambank stabilization and habitat features consistent with the requirements in the approved WQT Plan (including the Establishment Plan, and the Operation and Maintenance Plan).

b. The Department will propose to reissue the WPDES Permit to allow the Village to use water quality trading as a compliance option, in accordance with the WQT Plan as approved by the Department.

c. Subject to the terms of this Agreement and the terms of the WPDES Permit issued to the Village, the Department shall allow the Village to utilize Total Phosphorus credits in the amount set forth in the approved WQT Plan to demonstrate compliance with phosphorus WQBELs in the WPDES Permit, provided the Village implements the approved WQT Plan and complies with the related trading terms of the Permit.

d. Any duly authorized officer, employee or representative of the Department shall have the right to access and inspect the streambank stabilization and habitat features' locations pursuant to Wis. Stat. § 283.55(2) so long as this

Agreement remains in effect.

e. The Agreement shall become effective on the later date of the completion of the following conditions: i.) the Department approves a WQT plan that is consistent with this Agreement; and ii.) The WPDES Permit includes trading terms that are consistent with both the approved WQT Plan and the terms of this Agreement.

f. The Agreement applies and is effective for the term of the issued Permit unless, subject to this section the Permit is modified, terminated or revoked and reissued by the Department to eliminate the trade or to revise the trading terms in a manner that is inconsistent with this Agreement. If the trade is removed or revised through a Permit action, this Agreement is terminated. In accordance with Wis. Stat. § 227.51(2), if the trade has not been eliminated or modified through a Permit action, and if the Village files a timely application for the reissuance of the Permit, the terms of the Agreement will continue until the later of the following: 1.) the application has been finally acted upon by the Department, 2.) the last day for seeking review of the agency's decision or 3.) a later date fixed by a reviewing court. The Agreement may extend into a subsequent reissued Permit upon approval of the Department.

g. The Parties may terminate this Agreement by written mutual agreement at any time.

h. The Village may terminate this Agreement by providing at least sixty (60) days written notice to the Department of the Village's intent to terminate the Agreement.

i. In accordance with paragraph (2j) and the procedures and requirements of Wis. Stat. § 283.53(2) and Wis. Admin. Code §§ NR 203.135 and 203.136, the Department may terminate this Agreement and modify or remove the terms of the Permit related to the trade if any one of the following occur:

1) The Village fails to implement the WQT Plan as approved by the Department;

2) The Village fails to comply with WPDES Permit terms and conditions related to water quality trading;

3) New information becomes available that causes the Department to determine that water quality trading is no longer an acceptable option, including an objection or disapproval of the trade by USEPA.

j. Any action by the Department to terminate this Agreement or otherwise to reduce or eliminate the number of phosphorus credits in the reissued WPDES Permit and approved WQT Plan shall be implemented through a modification, revocation and reissuance or reissuance of the W PDES Permit. Prior to termination of this agreement, the Department shall notify the Village of its

intent to terminate the trading agreement and shall provide an opportunity for the Village to discuss the proposed termination with the Department. If appropriate and feasible, the Department shall provide the Village with a reasonable time period to correct the grounds for the proposed termination.

k. This Agreement may be amended only by a further written document signed by each of the Parties. The WQT Plan, Agreement and Permit terms may be revised as part of a future Permit reissuance or modification.

l. This Agreement shall be interpreted pursuant to the laws of the State of Wisconsin.

m. This Agreement may be executed in one or more counterparts, and all such executed counterparts shall constitute the same agreement. A signed copy of this Agreement transmitted by facsimile or email shall be treated as an original and shall be binding against the party whose signature appears on such copy.

n. If any provision of this Agreement is held invalid or unenforceable, the invalidity or unenforceability shall be limited to the particular provision involved and shall not affect the validity or enforceability of the remaining provisions. The Parties shall work together in good faith to modify this Agreement if necessary to preserve its original intent.

o. In no event shall the Department be liable to any party under this Agreement or to any third party in contract, tort or otherwise for incidental or consequential damages of any kind, including, without limitation, punitive or economic damages or lost profits, except as provided under federal or state laws.

IN WITNESS WHEREOF, the Parties have executed this Agreement as of the day and year entered below.

VILLAGE OF CASHTON	**WISCONSIN DEPARTMENT OF NATURAL RESOURCES**
By: _____	By: _____
Title: Village President	Title: _____
Date: _____	Date: _____

Attachment #8

WISCONSIN DEPARTMENT OF NATURAL RESOURCES

Wetland Map - Village Site

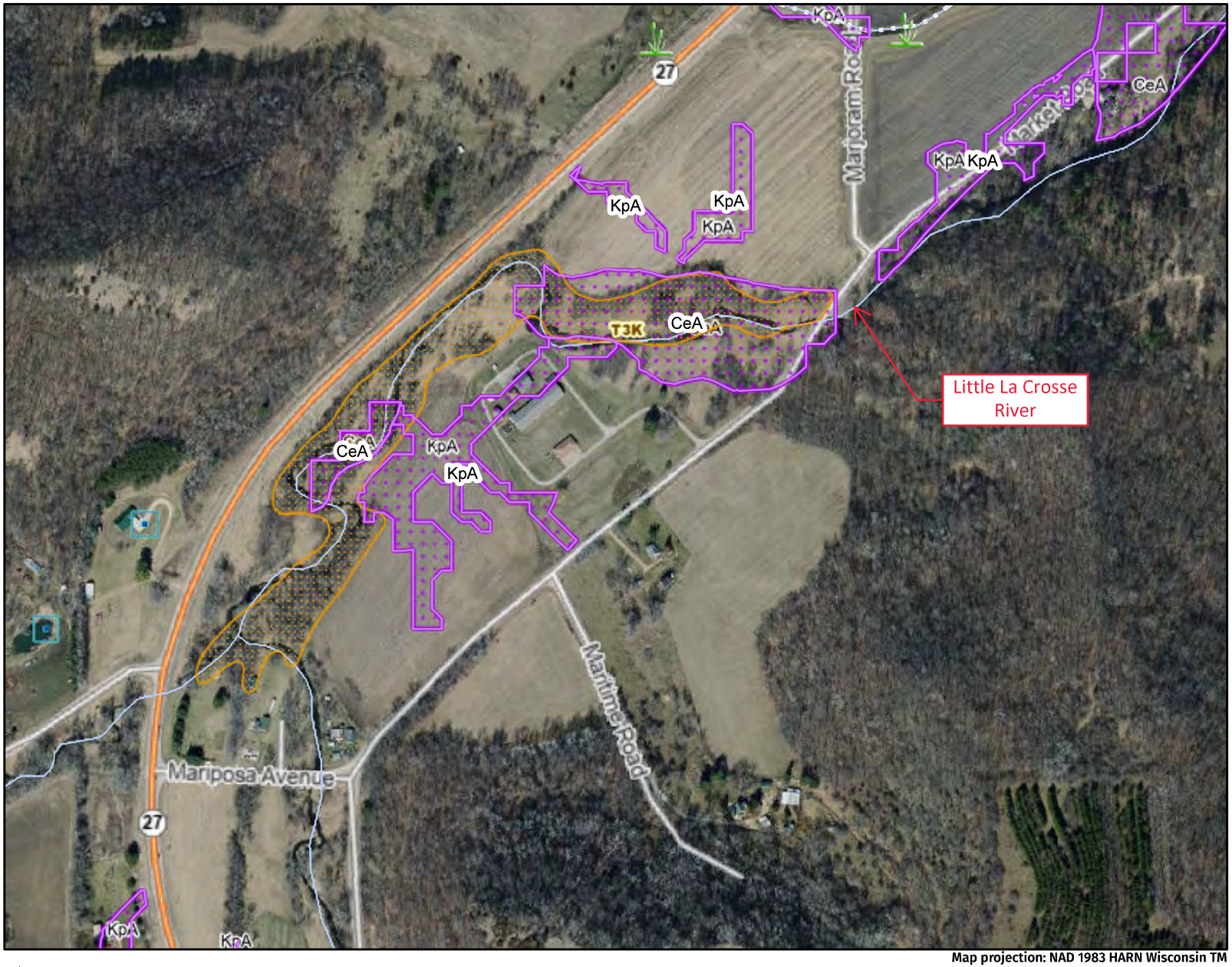

Legend: (some map layers may not be displayed)

- Wetland Indicators

Wetland Class Points

- Excavated pond
- Wetland too small to delineate
- Wetland Class Areas
- Wetland Indicators
- Rivers and Streams
- Intermittent Streams
- 24K Intermittent Streams
- 24K Streams and Rivers
- County Boundaries

Major Roads

- State Highway

County and Local Roads

- Local Road
- Latest Leaf Off Imagery

Notes:



Map projection: NAD 1983 HARN Wisconsin TM

N

Map: 0 460 920 Feet
0 130 260 Meters

Service Layer Credits:
Wetland Indicators & Soils^: Surface Water Data Viewer Team, Latest Leaf Off: , DNR Basic Feature Vector Tile Layer WTM: , Cities, Roads & Boundaries: , Surface Water (Cached): WiDNR, USGS, and other data, Wetland Inventory NWI (Dynamic): Calvin Lawrence, Dennis Weise, Nina Rihn

This map is a product generated by a DNR web mapping application.

This map is for informational purposes only and may not have been prepared for or be suitable for legal, engineering, or surveying purposes. The user is solely responsible for verifying the accuracy of information before using for any purpose. By using this product for any purpose user agrees to be bound by all disclaimers found here: https://dnr.wisconsin.gov/legal.

Date Printed: 9/22/2025 12:36 PM

WISCONSIN DEPARTMENT OF NATURAL RESOURCES

Wetland Map - Melvina Site

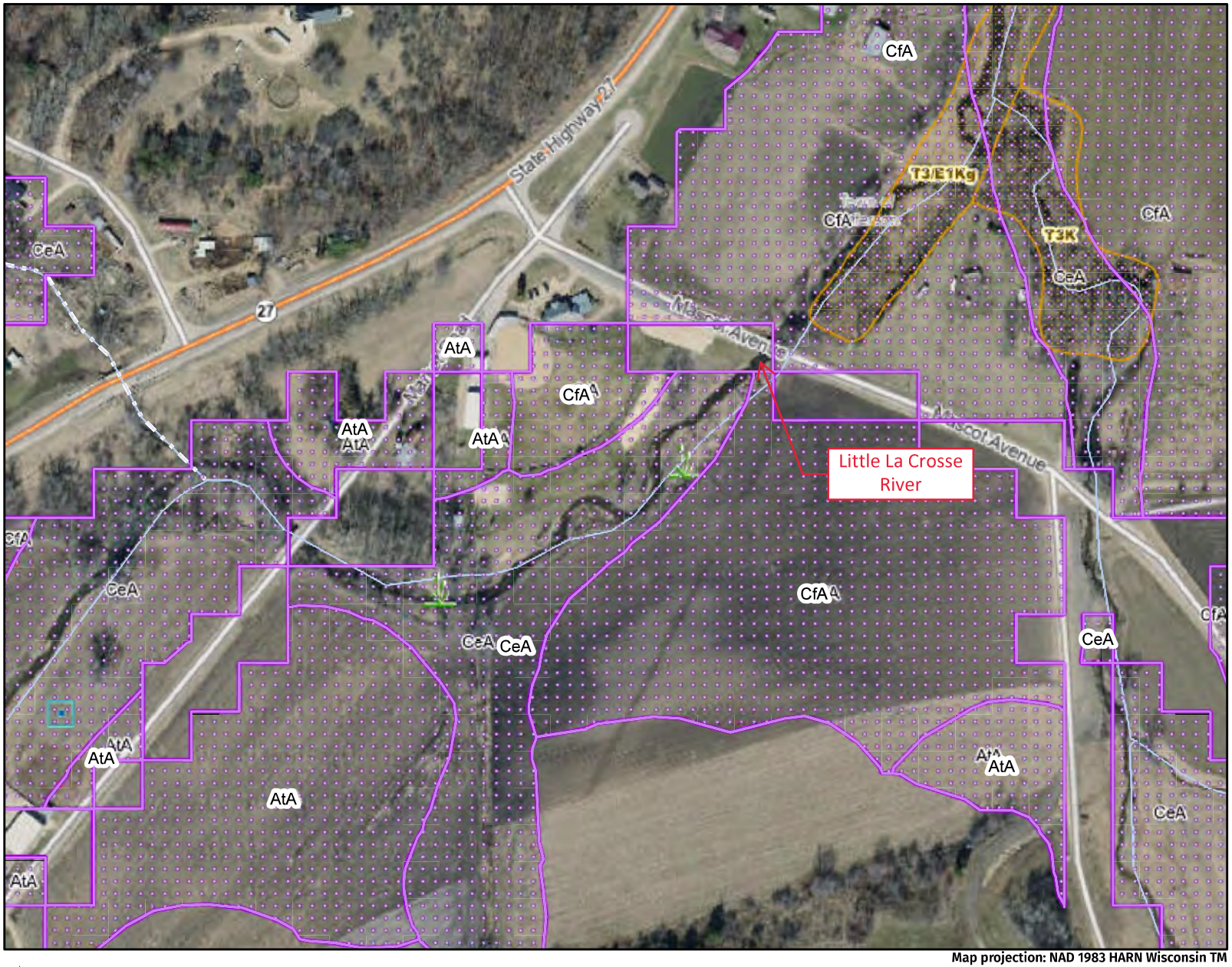

Legend: (some map layers may not be displayed)

- Wetland Indicators

Wetland Class Points

- Excavated pond
- Wetland too small to delineate
- Wetland Class Areas
- Wetland Indicators
- Rivers and Streams
- Intermittent Streams
- 24K Intermittent Streams
- 24K Streams and Rivers
- City or Village
- County Boundaries

Major Roads

- State Highway

County and Local Roads

- Local Road
- Latest Leaf Off Imagery

Notes:



Map projection: NAD 1983 HARN Wisconsin TM

N

Map: 0 280 560 Feet
0 80 160 Meters

Service Layer Credits:
Wetland Indicators & Soils^: Surface Water Data Viewer Team, Latest Leaf Off: , DNR Basic Feature Vector Tile Layer WTM: , Cities, Roads & Boundaries: , Surface Water (Cached): WiDNR, USGS, and other data, Wetland Inventory NWI (Dynamic): Calvin Lawrence, Dennis Weise, Nina Rihn

This map is a product generated by a DNR web mapping application.

This map is for informational purposes only and may not have been prepared for or be suitable for legal, engineering, or surveying purposes. The user is solely responsible for verifying the accuracy of information before using for any purpose. By using this product for any purpose user agrees to be bound by all disclaimers found here: https://dnr.wisconsin.gov/legal.

Date Printed: 9/22/2025 12:33 PM

WISCONSIN DEPARTMENT OF NATURAL RESOURCES

Wetland Map - Brueggen Site

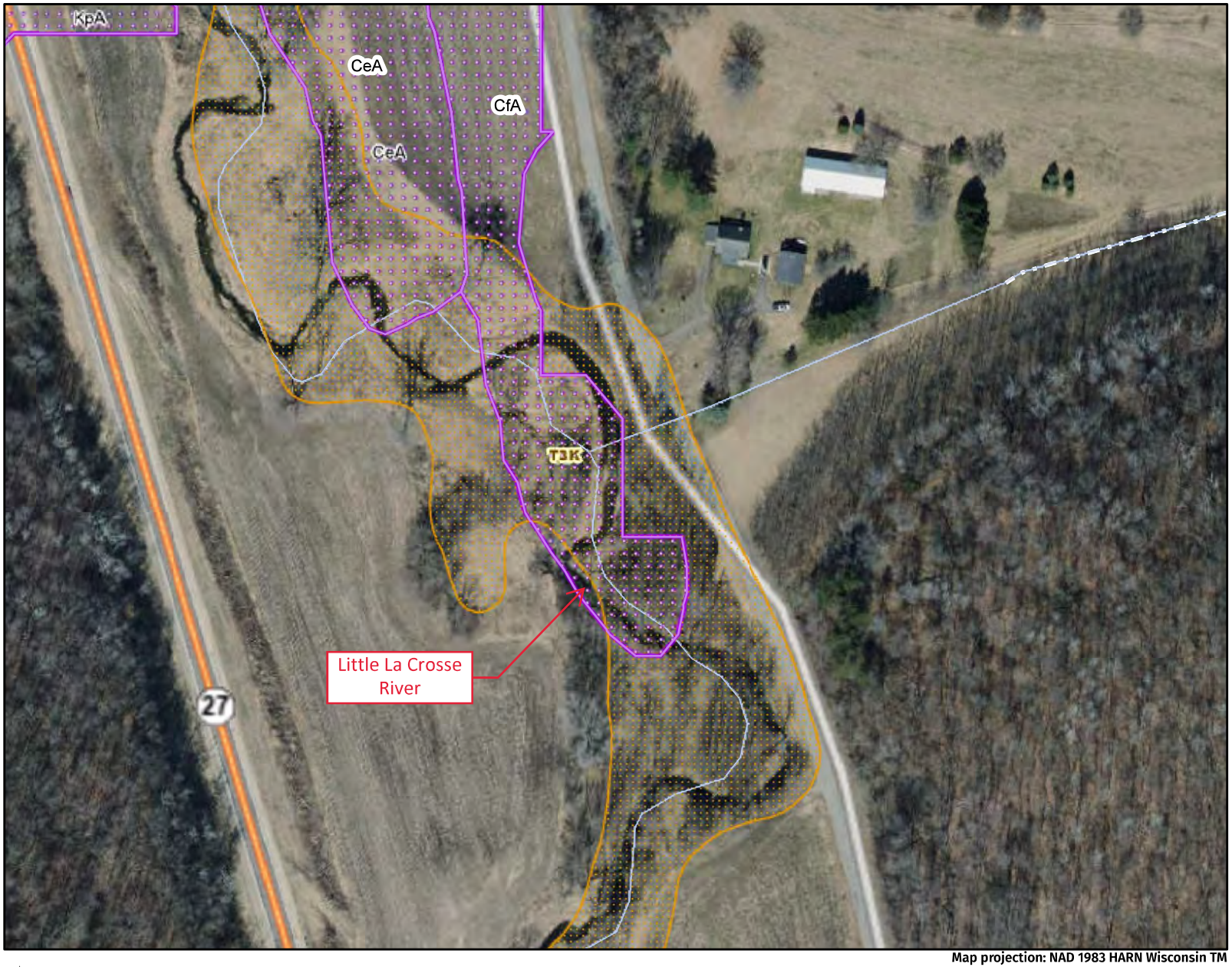

Legend: (some map layers may not be displayed)

- Wetland Indicators
- Wetland Class Areas
- Wetland Indicators
- Rivers and Streams
- Intermittent Streams
- 24K Intermittent Streams
- 24K Streams and Rivers
- County Boundaries

Major Roads

- State Highway

County and Local Roads

- Local Road
- Latest Leaf Off Imagery

Notes:



Map projection: NAD 1983 HARN Wisconsin TM

N

Map: 0 160 320 Feet
0 40 80 Meters

Service Layer Credits:
Wetland Indicators & Soils^: Surface Water Data Viewer Team, Latest Leaf Off: , DNR Basic Feature Vector Tile Layer WTM: , Cities, Roads & Boundaries: , Surface Water (Cached): WiDNR, USGS, and other data, Wetland Inventory NWI (Dynamic): Calvin Lawrence, Dennis Weise, Nina Rihn

This map is a product generated by a DNR web mapping application.

This map is for informational purposes only and may not have been prepared for or be suitable for legal, engineering, or surveying purposes. The user is solely responsible for verifying the accuracy of information before using for any purpose. By using this product for any purpose user agrees to be bound by all disclaimers found here: https://dnr.wisconsin.gov/legal.

Date Printed: 9/22/2025 12:38 PM

Attachment #9

WISCONSIN DEPARTMENT OF NATURAL RESOURCES

SPARROW Model Map

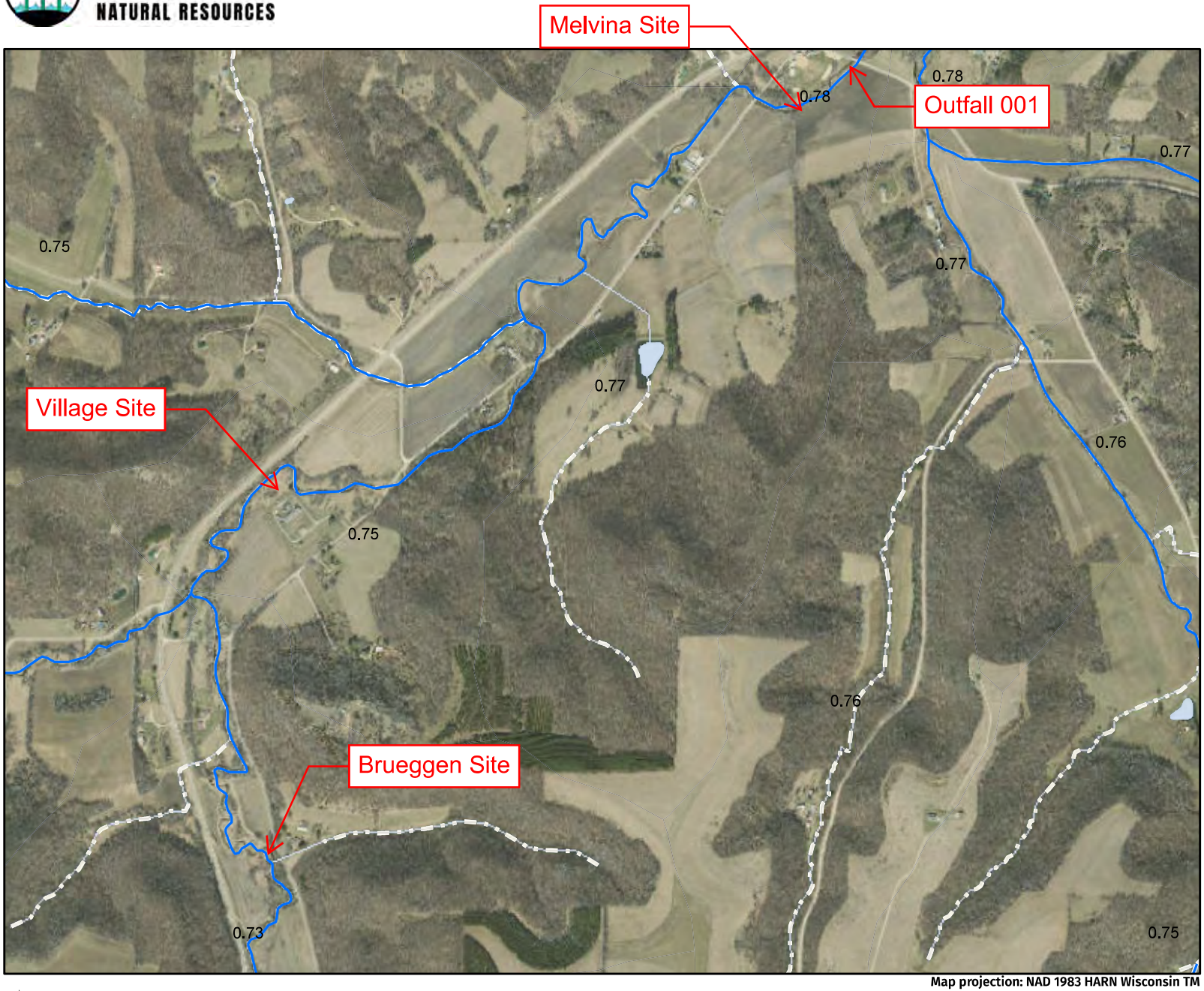

Legend: (some map layers may not be displayed)

- AU Lines - River Stream Beach Shore
- SPARROW*
- 0.621401 - 0.825600
- Rivers and Streams
- Intermittent Streams
- Open Water
- 24K Intermittent Streams
- 24K Lakes and Open Water
- Latest Leaf Off Imagery

Notes:

Map projection: NAD 1983 HARN Wisconsin TM

N

Map: 0 1,000 2,000 Feet
0 390 780 Meters

Service Layer Credits:
Latest Leaf Off: , DNR Basic Feature Vector Tile Layer WTM: , Surface Water (Cached): WiDNR, USGS, and other data

Map Location



This map is a product generated by a DNR web mapping application.

This map is for informational purposes only and may not have been prepared for or be suitable for legal, engineering, or surveying purposes. The user is solely responsible for verifying the accuracy of information before using for any purpose. By using this product for any purpose user agrees to be bound by all disclaimers found here: https://dnr.wisconsin.gov/legal.

Date Printed: 10/1/2025 1:34 PM

Attachment #10

Current State of Eroding Streambanks Documentation

Property Owner	ID	Eroding Bank Height Measurement #	Eroding Bank Height (Feet)	Eroding Bank Length (Feet)	Erosion Rate (Feet/Year)	Soil Type
Village of Cashton	1	1	2.1	240.0	0.43	Sandy Clay
		2	3.5			
		3	5.8			
		4	4.7			
		5	3.9			
		AVERAGE	4			
	2	1	7.8	370.0	0.40	Sandy Clay
		2	8.7			
		3	10.6			
		4	8.5			
		5	7.4			
		AVERAGE	8.6			
	3	1	5.3	270.0	1.73	Sandy Clay
		2	6.6			
		3	8.6			
		4	6.8			
		5	6.2			
		AVERAGE	6.7			
	4	1	5.7	210.0	0.41	Sandy Clay
		2	6.1			
		3	6.9			
		4	6.0			
		5	11.5			
		AVERAGE	7.2			
Melvina Township	1	1	2.9	85.0	3.80	Silt Loam
		2	3.1			
		3	-			
		4	-			
		5	-			
		AVERAGE	3.0			

Property Owner	ID	Eroding Bank Height Measurement #	Eroding Bank Height (Feet)	Eroding Bank Length (Feet)	Erosion Rate (Feet/Year)	Soil Type
Brueggen	1	1	5.3	245.0	0.68	Sandy Loam
		2	7.1			
		3	8.6			
		4	7.9			
		5	6.0			
		AVERAGE	7.0			
	2	1	7.1	130.0	0.50	Sandy Loam
		2	7.4			
		3	6.6			
		4	-			
		5	-			
		AVERAGE	7.0			
	3	1		275.0	0.50	Sandy Loam
		2				
		3				
		4				
		5				
		AVERAGE	4.0			

*All Measured Data referenced above was measured by Monroe County Conservationist and confirmed by Delta 3 Engineering.

*Orange text represents a changed field measurement due to significant erosion event.

*Red text represents a changed field measurement due to substantial erosion event.

Project Photos
Water Quality Trading Plan
Village of Cashton

Photo #1 (Date Taken: 4/10/2024)



ID: Cashton #1

Viewing Direction: Upstream

Evidence of Erosion:

☒Severe Undercut with Slump
☒Vegetative Overhang
☒Bare Soil Visible
☒Vertical or Near Vertical Banks
☒Exposed Tree Roots
☒Fallen Trees
☒Gullies or Rills
☐Other:

Project Photos
Water Quality Trading Plan
Village of Cashton

Photo #2 (Date Taken: 4/10/2024)



ID: Cashton #1

Viewing Direction: Upstream

Evidence of Erosion:

☒Severe Undercut with Slump
☒Vegetative Overhang
☒Bare Soil Visible
☐Vertical or Near Vertical Banks
☒Exposed Tree Roots
☒Fallen Trees
☐Gullies or Rills
☐Other:

Project Photos
Water Quality Trading Plan
Village of Cashton

Photo #3.1 (Date Taken: 4/10/2024)



ID: Cashton #1

Viewing Direction: Upstream

Evidence of Erosion:

☒Severe Undercut with Slump
☒Vegetative Overhang
☒Bare Soil Visible
☐Vertical or Near Vertical Banks
☒Exposed Tree Roots
☐Fallen Trees
☐Gullies or Rills
☐Other:

Project Photos
Water Quality Trading Plan
Village of Cashton

Photo #3.2 (Date Taken: 4/29/2026)



ID: Cashton #1

Viewing Direction: Upstream

Evidence of Erosion:

☒Severe Undercut with Slump
☒Vegetative Overhang
☒Bare Soil Visible
☒Vertical or Near Vertical Banks
☒Exposed Tree Roots
☐Fallen Trees
☐Gullies or Rills
☐Other:

Project Photos
Water Quality Trading Plan
Village of Cashton

Photo #4.1 (Date Taken: 4/29/2026)



ID: Cashton #2

Viewing Direction: Upstream

Evidence of Erosion:

☒Severe Undercut with Slump
☒Vegetative Overhang
☒Bare Soil Visible
☒Vertical or Near Vertical Banks
☒Exposed Tree Roots
☐Fallen Trees
☐Gullies or Rills
☐Other:

Project Photos
Water Quality Trading Plan
Village of Cashton

Photo #4.2 (Date Taken: 4/10/2024)



ID: Cashton #2

Viewing Direction: Upstream

Evidence of Erosion:

☒Severe Undercut with Slump
☐Vegetative Overhang
☒Bare Soil Visible
☐Vertical or Near Vertical Banks
☒Exposed Tree Roots
☐Fallen Trees
☐Gullies or Rills
☐Other:

Project Photos
Water Quality Trading Plan
Village of Cashton

Photo #5 (Date Taken: 4/10/2024)



ID: Cashton #2

Viewing Direction: Upstream

Evidence of Erosion:

☒Severe Undercut with Slump
☒Vegetative Overhang
☒Bare Soil Visible
☒Vertical or Near Vertical Banks
☒Exposed Tree Roots
☐Fallen Trees
☐Gullies or Rills
☐Other:

Project Photos
Water Quality Trading Plan
Village of Cashton

Photo #6 (Date Taken: 4/10/2024)



ID: Cashton #2

Viewing Direction: Upstream

Evidence of Erosion:

☒Severe Undercut with Slump
☒Vegetative Overhang
☒Bare Soil Visible
☒Vertical or Near Vertical Banks
☒Exposed Tree Roots
☒Fallen Trees
☐Gullies or Rills
☐Other:

Project Photos
Water Quality Trading Plan
Village of Cashton

Photo #7 (Date Taken: 4/10/2024)



ID: Cashton #2

Viewing Direction: Upstream

Evidence of Erosion:

☒Severe Undercut with Slump
☒Vegetative Overhang
☒Bare Soil Visible
☒Vertical or Near Vertical Banks
☒Exposed Tree Roots
☒Fallen Trees
☐Gullies or Rills
☐Other:

Project Photos
Water Quality Trading Plan
Village of Cashton

Photo #8 (Date Taken: 4/10/2024)



ID: Cashton #3

Viewing Direction: Upstream

Evidence of Erosion:

☒Severe Undercut with Slump
☐Vegetative Overhang
☒Bare Soil Visible
☐Vertical or Near Vertical Banks
☒Exposed Tree Roots
☐Fallen Trees
☐Gullies or Rills
☐Other:

Project Photos
Water Quality Trading Plan
Village of Cashton

Photo #9 (Date Taken: 4/10/2024)



ID: Cashton #3

Viewing Direction: Upstream

Evidence of Erosion:

☒Severe Undercut with Slump
☐Vegetative Overhang
☒Bare Soil Visible
☐Vertical or Near Vertical Banks
☐Exposed Tree Roots
☐Fallen Trees
☐Gullies or Rills
☐Other:

Project Photos
Water Quality Trading Plan
Village of Cashton

Photo #10 (Date Taken: 4/10/2024)



ID: Cashton #3

Viewing Direction: Upstream

Evidence of Erosion:

☒Severe Undercut with Slump
☐Vegetative Overhang
☒Bare Soil Visible
☐Vertical or Near Vertical Banks
☒Exposed Tree Roots
☐Fallen Trees
☐Gullies or Rills
☐Other:

Project Photos
Water Quality Trading Plan
Village of Cashton

Photo #11 (Date Taken: 4/10/2024)



ID: Cashton #3

Viewing Direction: Upstream

Evidence of Erosion:

☒Severe Undercut with Slump
☒Vegetative Overhang
☒Bare Soil Visible
☒Vertical or Near Vertical Banks
☒Exposed Tree Roots
☐Fallen Trees
☒Gullies or Rills
☐Other:

Project Photos
Water Quality Trading Plan
Village of Cashton

Photo #12 (Date Taken: 4/10/2024)



ID: Cashton #3

Viewing Direction: Upstream

Evidence of Erosion:

☒Severe Undercut with Slump
☒Vegetative Overhang
☒Bare Soil Visible
☒Vertical or Near Vertical Banks
☐Exposed Tree Roots
☐Fallen Trees
☐Gullies or Rills
☐Other:

Project Photos
Water Quality Trading Plan
Village of Cashton

Photo #13 (Date Taken: 4/10/2024)



ID: Cashton #4

Viewing Direction: Upstream

Evidence of Erosion:

☒Severe Undercut with Slump
☒Vegetative Overhang
☒Bare Soil Visible
☒Vertical or Near Vertical Banks
☐Exposed Tree Roots
☐Fallen Trees
☐Gullies or Rills
☐Other:

Project Photos
Water Quality Trading Plan
Village of Cashton

Photo #14 (Date Taken: 4/10/2024)



ID: Cashton #4

Viewing Direction: Upstream

Evidence of Erosion:

☒Severe Undercut with Slump
☒Vegetative Overhang
☒Bare Soil Visible
☐Vertical or Near Vertical Banks
☐Exposed Tree Roots
☐Fallen Trees
☐Gullies or Rills
☐Other:

Project Photos
Water Quality Trading Plan
Village of Cashton

Photo #15 (Date Taken: 4/10/2024)



ID: Cashton #4

Viewing Direction: Upstream

Evidence of Erosion:

☒Severe Undercut with Slump
☒Vegetative Overhang
☒Bare Soil Visible
☐Vertical or Near Vertical Banks
☐Exposed Tree Roots
☐Fallen Trees
☐Gullies or Rills
☐Other:

Project Photos
Water Quality Trading Plan
Village of Cashton

Photo #16.1 (Date Taken: 4/10/2024)



ID: Cashton #4

Viewing Direction: Upstream

Evidence of Erosion:

☒Severe Undercut with Slump
☒Vegetative Overhang
☒Bare Soil Visible
☒Vertical or Near Vertical Banks
☐Exposed Tree Roots
☐Fallen Trees
☐Gullies or Rills
☐Other:

Project Photos
Water Quality Trading Plan
Village of Cashton

Photo #16.2 (Date Taken: 4/29/2026)



ID: Cashton #4

Viewing Direction: Upstream

Evidence of Erosion:

☒Severe Undercut with Slump
☒Vegetative Overhang
☒Bare Soil Visible
☒Vertical or Near Vertical Banks
☐Exposed Tree Roots
☐Fallen Trees
☐Gullies or Rills
☒Other: **Additional section from the top of existing bank has slumped off since 2024.**

Project Photos
Water Quality Trading Plan
Village of Cashton

Photo #17.1



ID: Melvina #1

Viewing Direction: Upstream

Evidence of Erosion:

☒Severe Undercut with Slump
☒Vegetative Overhang
☒Bare Soil Visible
☒Vertical or Near Vertical Banks
☐Exposed Tree Roots
☐Fallen Trees
☐Gullies or Rills
☐Other:

EVERY ANGLE COVERED

Project Photos
Water Quality Trading Plan
Village of Cashton

Photo #17.2 (Date Taken: 4/29/2026)



ID: Melvina #1

Viewing Direction: Downstream

Evidence of Erosion:

☒Severe Undercut with Slump
☒Vegetative Overhang
☒Bare Soil Visible
☒Vertical or Near Vertical Banks
☐Exposed Tree Roots
☐Fallen Trees
☐Gullies or Rills
☐Other:

Project Photos
Water Quality Trading Plan
Village of Cashton

Photo #17.3 (Date Taken: 4/29/2026)



ID: Melvina #1

Viewing Direction: Downstream

Evidence of Erosion:

☒Severe Undercut with Slump
☒Vegetative Overhang
☒Bare Soil Visible
☒Vertical or Near Vertical Banks
☐Exposed Tree Roots
☐Fallen Trees
☐Gullies or Rills
☐Other:

Project Photos
Water Quality Trading Plan
Village of Cashton

Photo #18



ID: Melvina #2

Viewing Direction: Upstream

Evidence of Erosion:

☒Severe Undercut with Slump
☐Vegetative Overhang
☒Bare Soil Visible
☐Vertical or Near Vertical Banks
☐Exposed Tree Roots
☐Fallen Trees
☐Gullies or Rills
☐Other:

EVERY ANGLE COVERED

Project Photos
Water Quality Trading Plan
Village of Cashton

Photo #19.1



ID: Brueggen #1

Viewing Direction: Upstream

Evidence of Erosion:

☒Severe Undercut with Slump
☐Vegetative Overhang
☒Bare Soil Visible
☐Vertical or Near Vertical Banks
☐Exposed Tree Roots
☒Fallen Trees
☐Gullies or Rills
☐Other:

EVERY ANGLE COVERED

Project Photos
Water Quality Trading Plan
Village of Cashton

Photo #19.2 (Date Taken: 4/29/2026)



ID: Brueggen #1

Viewing Direction: Downstream

Evidence of Erosion:

☒Severe Undercut with Slump
☒Vegetative Overhang
☒Bare Soil Visible
☒Vertical or Near Vertical Banks
☒Exposed Tree Roots
☒Fallen Trees
☐Gullies or Rills
☐Other:

Project Photos
Water Quality Trading Plan
Village of Cashton

Photo #19.3 (Date Taken: 4/29/2026)



ID: Brueggen #1

Viewing Direction: Downstream

Evidence of Erosion:

☒Severe Undercut with Slump
☒Vegetative Overhang
☒Bare Soil Visible
☒Vertical or Near Vertical Banks
☒Exposed Tree Roots
☒Fallen Trees
☐Gullies or Rills
☐Other:

Project Photos
Water Quality Trading Plan
Village of Cashton

Photo #20.1



ID: Brueggen #2

Viewing Direction: Upstream

Evidence of Erosion:

☒Severe Undercut with Slump
☐Vegetative Overhang
☒Bare Soil Visible
☐Vertical or Near Vertical Banks
☒Exposed Tree Roots
☒Fallen Trees
☐Gullies or Rills
☐Other:

Project Photos
Water Quality Trading Plan
Village of Cashton

Photo #20.2 (Date Taken: 4/29/2026)



ID: Brueggen #2

Viewing Direction: Upstream

Evidence of Erosion:

☒Severe Undercut with Slump
☒Vegetative Overhang
☒Bare Soil Visible
☒Vertical or Near Vertical Banks
☒Exposed Tree Roots
☒Fallen Trees
☐Gullies or Rills
☐Other:

Project Photos
Water Quality Trading Plan
Village of Cashton

Photo #20.3 (Date Taken: 4/29/2026)



ID: Brueggen #2

Viewing Direction: Upstream

Evidence of Erosion:

☒Severe Undercut with Slump
☒Vegetative Overhang
☒Bare Soil Visible
☒Vertical or Near Vertical Banks
☒Exposed Tree Roots
☒Fallen Trees
☐Gullies or Rills
☒Other: **Large pocket of erosion behind the existing streambank**

Project Photos
Water Quality Trading Plan
Village of Cashton

Photo #21.1



ID: Brueggen #3

Viewing Direction: Upstream

Evidence of Erosion:

☒Severe Undercut with Slump
☐Vegetative Overhang
☒Bare Soil Visible
☐Vertical or Near Vertical Banks
☐Exposed Tree Roots
☐Fallen Trees
☐Gullies or Rills
☐Other:

Project Photos
Water Quality Trading Plan
Village of Cashton

Photo #21.2 (Date Taken: 4/29/2026)



ID: Brueggen #3

Viewing Direction: Downstream

Evidence of Erosion:

☒Severe Undercut with Slump
☒Vegetative Overhang
☒Bare Soil Visible
☐Vertical or Near Vertical Banks
☒Exposed Tree Roots
☒Fallen Trees
☐Gullies or Rills
☐Other:

Project Photos
Water Quality Trading Plan
Village of Cashton

Photo #21.3 (Date Taken: 4/29/2026)



ID: Brueggen #3

Viewing Direction: N/A

Evidence of Erosion:

☒Severe Undercut with Slump
☒Vegetative Overhang
☒Bare Soil Visible
☒Vertical or Near Vertical Banks
☒Exposed Tree Roots
☐Fallen Trees
☒Gullies or Rills
☐Other:

Beacon™ Monroe County, WI

Village of Cashton Site #1 (2020)

Created by: null



Parcels
Lakes and Rivers
Parcel Labels
Fort McCoy
Monroe County
Interstates
US Highways
State Highways
County Roads
Local Roads and Streets
Fort McCoy Roads
Named Private Drive
Limited Access
Ramp
Railroads

Beacon™ Monroe County, WI

Village of Cashton Site #1 (2024)

Created by: null

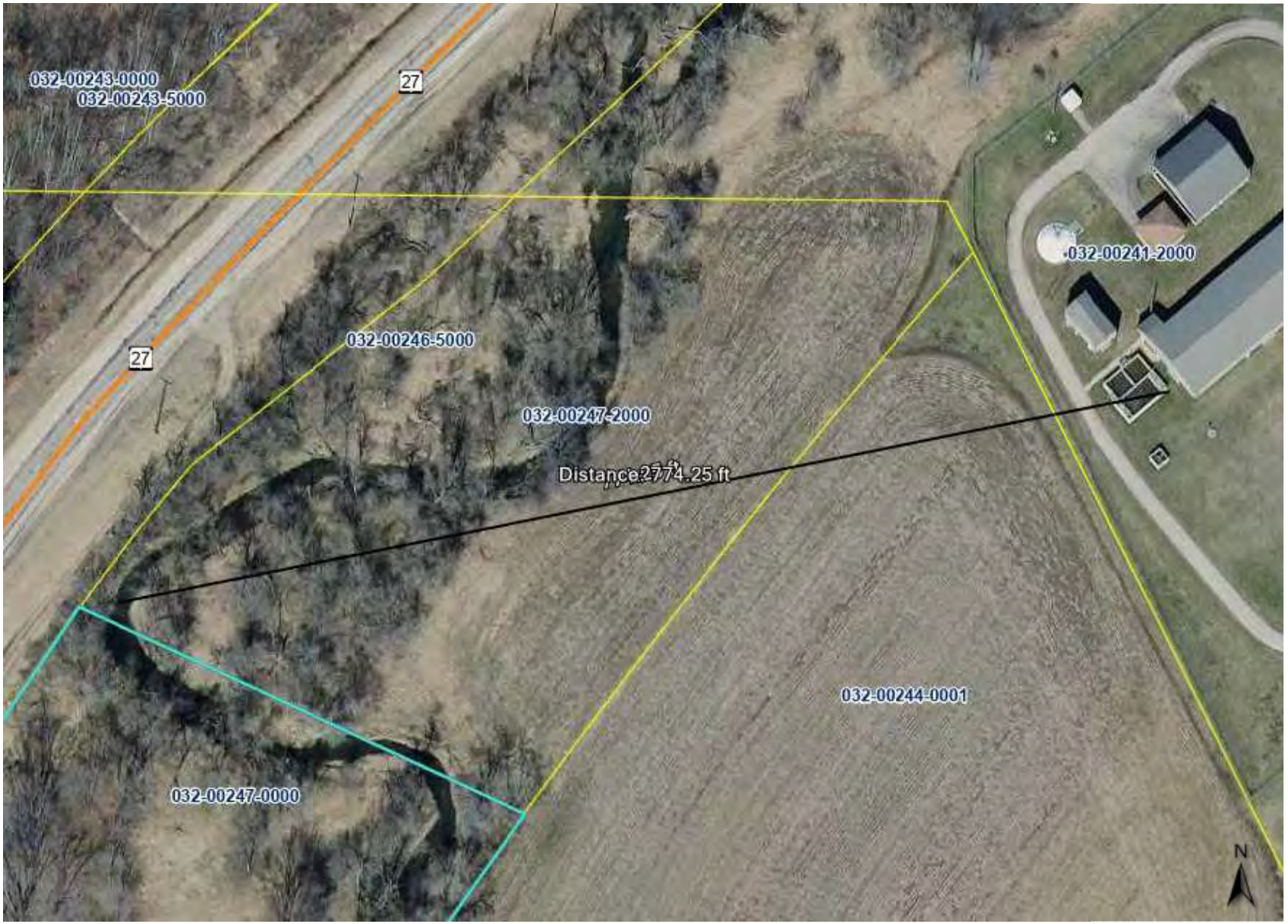

Parcels

Lakes and Rivers

Parcel Labels

Fort McCoy

Monroe County

Interstates

US Highways

State Highways

County Roads

Local Roads and Streets

Fort McCoy Roads

Named Private Drive

Limited Access

Ramp

Railroads

Beacon™ Monroe County, WI

Village of Cashton Site #3 (2015)

Created by: null

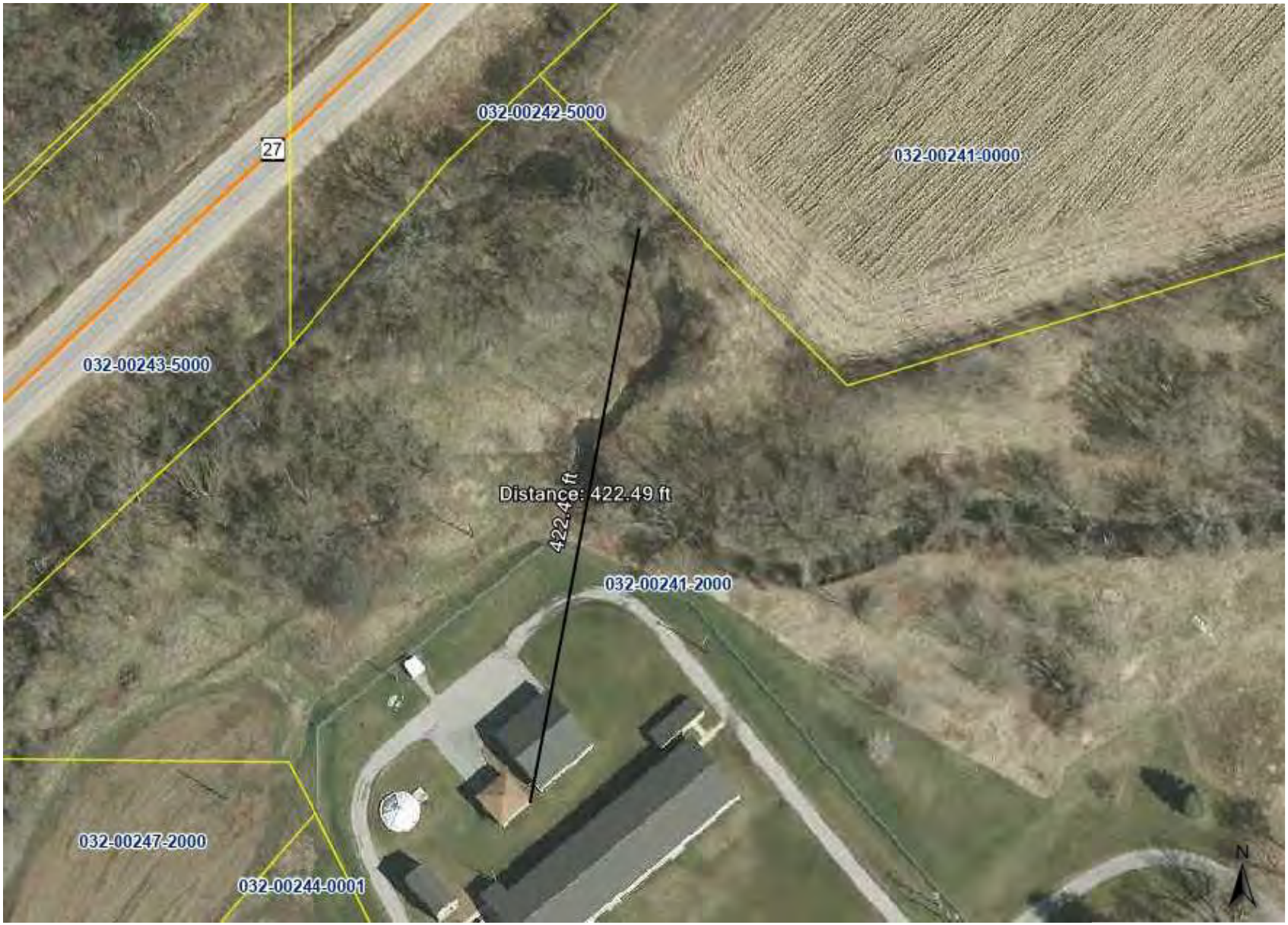

Parcels

Lakes and Rivers

Parcel Labels

Fort McCoy

Monroe County

Interstates

US Highways

State Highways

County Roads

Local Roads and Streets

Fort McCoy Roads

Named Private Drive

Limited Access

Ramp

Railroads

Beacon™ Monroe County, WI

Village of Cashton Site #3 (2024)

Created by: null



Parcels

Lakes and Rivers

Parcel Labels

Fort McCoy

Monroe County

Interstates

US Highways

State Highways

County Roads

Local Roads and Streets

Fort McCoy Roads

Named Private Drive

Limited Access

Ramp

Railroads

Beacon™ Monroe County, WI

Village of Cashton Site #4 (2020)

Created by: null



Parcels

Lakes and Rivers

Parcel Labels

Fort McCoy

Monroe County

Interstates

US Highways

State Highways

County Roads

Local Roads and Streets

Fort McCoy Roads

Named Private Drive

Limited Access

Ramp

Railroads

Beacon™ Monroe County, WI

Village of Cashton Site #4 (2024)

Created by: null



Parcels

Lakes and Rivers

Parcel Labels

Fort McCoy

Monroe County

Interstates

US Highways

State Highways

County Roads

Local Roads and Streets

Fort McCoy Roads

Named Private Drive

Limited Access

Ramp

Railroads

Beacon™ Monroe County, WI

Melvina Site #1 (2015)

Created by: null



Parcels
Lakes and Rivers
Parcel Labels
Fort McCoy
Monroe County
Interstates
US Highways
State Highways
County Roads
Local Roads and Streets
Fort McCoy Roads
Named Private Drive
Limited Access
Ramp
Railroads

Beacon™ Monroe County, WI

Melvina Site #1 (2024)

Created by: null

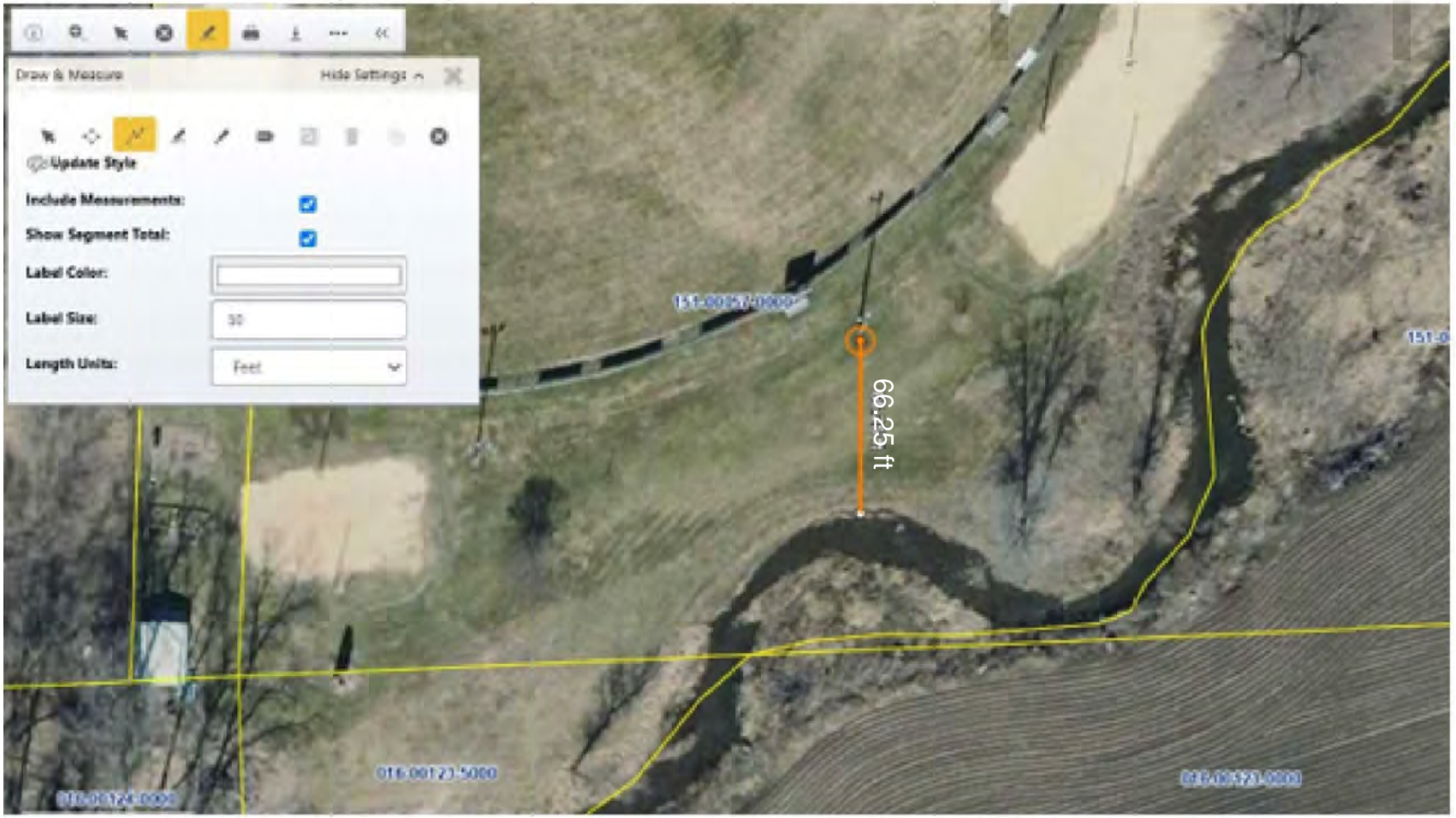

Parcels
Lakes and Rivers
Parcel Labels
Fort McCoy
Monroe County
Interstates
US Highways
State Highways
County Roads
Local Roads and Streets
Fort McCoy Roads
Named Private Drive
Limited Access
Ramp
Railroads

Attachment #11

Village Site

Soil Map—Monroe County, Wisconsin
(Cashton)

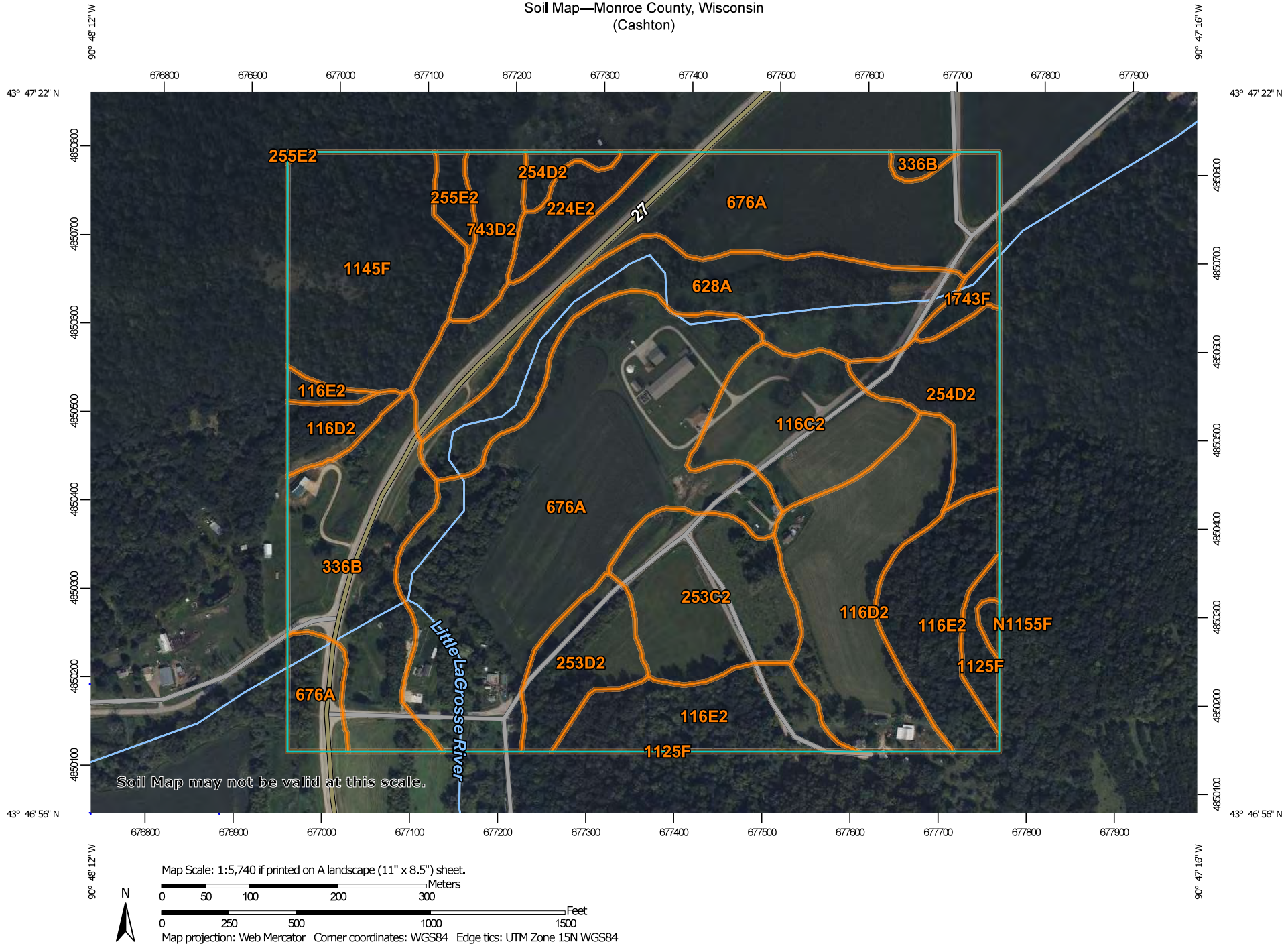

Map Scale: 1:5,740 if printed on A landscape (11" x 8.5") sheet.

N

Meters
0 50 100 200 300

Feet
0 250 500 1000 1500

Map projection: Web Mercator Corner coordinates: WGS84 Edge tics: UTM Zone 15N WGS84

MAP LEGEND

Area of Interest (AOI)
- Area of Interest (AOI)

Soils
- Soil Map Unit Polygons
- Soil Map Unit Lines
- Soil Map Unit Points

Special Point Features
- Blowout
- Borrow Pit
- Clay Spot
- Closed Depression
- Gravel Pit
- Gravelly Spot
- Landfill
- Lava Flow
- Marsh or swamp
- Mine or Quarry
- Miscellaneous Water
- Perennial Water
- Rock Outcrop
- Saline Spot
- Sandy Spot
- Severely Eroded Spot
- Sinkhole
- Slide or Slip
- Sodic Spot
- Spoil Area
- Stony Spot
- Very Stony Spot
- Wet Spot
- Other
- Special Line Features

Water Features
- Streams and Canals

Transportation
- Rails
- Interstate Highways
- US Routes
- Major Roads
- Local Roads

Background
- Aerial Photography

MAP INFORMATION

The soil surveys that comprise your AOI were mapped at 1:15,800.

Warning: Soil Map may not be valid at this scale.

Enlargement of maps beyond the scale of mapping can cause misunderstanding of the detail of mapping and accuracy of soil line placement. The maps do not show the small areas of contrasting soils that could have been shown at a more detailed scale.

Please rely on the bar scale on each map sheet for map measurements.

Source of Map: Natural Resources Conservation Service
Web Soil Survey URL:
Coordinate System: Web Mercator (EPSG:3857)

Maps from the Web Soil Survey are based on the Web Mercator projection, which preserves direction and shape but distorts distance and area. A projection that preserves area, such as the Albers equal-area conic projection, should be used if more accurate calculations of distance or area are required.

This product is generated from the USDA-NRCS certified data as of the version date(s) listed below.

Soil Survey Area: Monroe County, Wisconsin
Survey Area Data: Version 19, Sep 8, 2023

Soil map units are labeled (as space allows) for map scales 1:50,000 or larger.

Date(s) aerial images were photographed: Aug 2, 2022—Sep 28, 2022

The orthophoto or other base map on which the soil lines were compiled and digitized probably differs from the background imagery displayed on these maps. As a result, some minor shifting of map unit boundaries may be evident.

Map Unit Legend

Map Unit Symbol	Map Unit Name	Acres in AOI	Percent of AOI
116C2	Churchtown silt loam, 6 to 12 percent slopes, moderately eroded	7.0	5.2%
116D2	Churchtown silt loam, 12 to 20 percent slopes, moderately eroded	12.3	9.1%
116E2	Churchtown silt loam, 20 to 30 percent slopes, moderately eroded	12.3	9.0%
224E2	Elevasil sandy loam, 20 to 30 percent slopes, moderately eroded	2.2	1.6%
253C2	Greenridge silt loam, 4 to 12 percent slopes, moderately eroded	7.8	5.8%
253D2	Greenridge silt loam, 12 to 20 percent slopes, moderately eroded	3.9	2.9%
254D2	Norden silt loam, 12 to 20 percent slopes, moderately eroded	5.3	3.9%
255E2	Urne fine sandy loam, 20 to 30 percent slopes, moderately eroded	1.0	0.7%
336B	Toddville silt loam, 1 to 6 percent slopes	11.1	8.1%
628A	Orion silt loam, 0 to 3 percent slopes, occasionally flooded	11.5	8.5%
676A	Kickapoo fine sandy loam, 0 to 3 percent slopes, occasionally flooded	44.9	33.1%
743D2	Council fine sandy loam, 12 to 20 percent slopes, moderately eroded	2.6	1.9%
1125F	Dorerton, very stony-Elbaville complex, 30 to 60 percent slopes	1.2	0.9%
1145F	Gaphill-Rockbluff complex, 30 to 60 percent slopes	11.6	8.5%
1743F	Council-Elevasil-Norden complex, 20 to 45 percent slopes, rocky	0.9	0.7%
N1155F	Brodale-Bellechester complex, 30 to 60 percent slopes, rocky	0.3	0.2%
Totals for Area of Interest		**135.9**	**100.0%**

Melvina Site

Soil Map—Monroe County, Wisconsin



Map Scale: 1:3,860 if printed on A landscape (11" x 8.5") sheet.

N

Meters: 0 50 100 200 300

Feet: 0 150 300 600 900

Map projection: Web Mercator Corner coordinates: WGS84 Edge tics: UTM Zone 15N WGS84

MAP LEGEND

Area of Interest (AOI)

- Area of Interest (AOI)

Soils

- Soil Map Unit Polygons
- Soil Map Unit Lines
- Soil Map Unit Points

Special Point Features

- Blowout
- Borrow Pit
- Clay Spot
- Closed Depression
- Gravel Pit
- Gravelly Spot
- Landfill
- Lava Flow
- Marsh or swamp
- Mine or Quarry
- Miscellaneous Water
- Perennial Water
- Rock Outcrop
- Saline Spot
- Sandy Spot
- Severely Eroded Spot
- Sinkhole
- Slide or Slip
- Sodic Spot
- Spoil Area
- Stony Spot
- Very Stony Spot
- Wet Spot
- Other
- Special Line Features

Water Features

- Streams and Canals

Transportation

- Rails
- Interstate Highways
- US Routes
- Major Roads
- Local Roads

Background

- Aerial Photography

MAP INFORMATION

The soil surveys that comprise your AOI were mapped at 1:12,000.

Warning: Soil Map may not be valid at this scale.

Enlargement of maps beyond the scale of mapping can cause misunderstanding of the detail of mapping and accuracy of soil line placement. The maps do not show the small areas of contrasting soils that could have been shown at a more detailed scale.

Please rely on the bar scale on each map sheet for map measurements.

Source of Map: Natural Resources Conservation Service
Web Soil Survey URL:
Coordinate System: Web Mercator (EPSG:3857)

Maps from the Web Soil Survey are based on the Web Mercator projection, which preserves direction and shape but distorts distance and area. A projection that preserves area, such as the Albers equal-area conic projection, should be used if more accurate calculations of distance or area are required.

This product is generated from the USDA-NRCS certified data as of the version date(s) listed below.

Soil Survey Area: Monroe County, Wisconsin
Survey Area Data: Version 20, Sep 3, 2024

Soil map units are labeled (as space allows) for map scales 1:50,000 or larger.

Date(s) aerial images were photographed: Aug 2, 2022—Sep 28, 2022

The orthophoto or other base map on which the soil lines were compiled and digitized probably differs from the background imagery displayed on these maps. As a result, some minor shifting of map unit boundaries may be evident.

Map Unit Legend

Map Unit Symbol	Map Unit Name	Acres in AOI	Percent of AOI
118C2	Seaton silt loam, driftless valley, 6 to 12 percent slopes, moderately eroded	0.0	0.1%
126B	Barremills silt loam, 1 to 6 percent slopes	3.9	7.6%
202C2	Lambeau silt loam, 6 to 12 percent slopes, moderately eroded	1.9	3.6%
224E2	Elevasil sandy loam, 20 to 30 percent slopes, moderately eroded	3.2	6.1%
318A	Bearpen silt loam, 0 to 3 percent slopes, rarely flooded	10.9	21.0%
628A	Orion silt loam, 0 to 3 percent slopes, occasionally flooded	31.4	60.6%
743C2	Council fine sandy loam, 6 to 12 percent slopes, moderately eroded	0.5	1.0%
Totals for Area of Interest		**51.8**	**100.0%**

Brueggen Site

Soil Map—Monroe County, Wisconsin

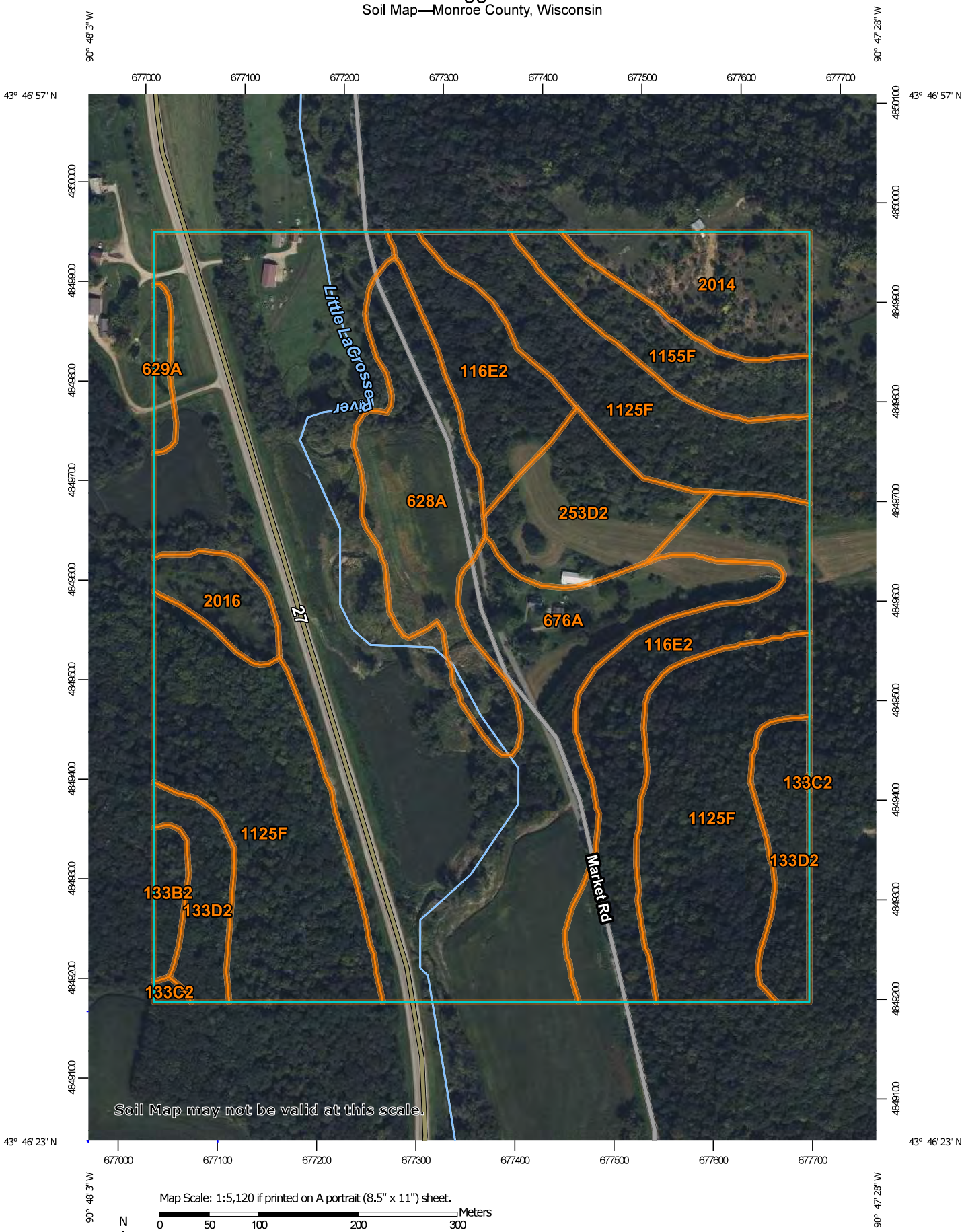

Map Scale: 1:5,120 if printed on A portrait (8.5" x 11") sheet.

N

Meters: 0 50 100 200 300

Feet: 0 200 400 800 1200

Map projection: Web Mercator Corner coordinates: WGS84 Edge tics: UTM Zone 15N WGS84

MAP LEGEND

Area of Interest (AOI)

- Area of Interest (AOI)

Soils

- Soil Map Unit Polygons
- Soil Map Unit Lines
- Soil Map Unit Points

Special Point Features

- Blowout
- Borrow Pit
- Clay Spot
- Closed Depression
- Gravel Pit
- Gravelly Spot
- Landfill
- Lava Flow
- Marsh or swamp
- Mine or Quarry
- Miscellaneous Water
- Perennial Water
- Rock Outcrop
- Saline Spot
- Sandy Spot
- Severely Eroded Spot
- Sinkhole
- Slide or Slip
- Sodic Spot
- Spoil Area
- Stony Spot
- Very Stony Spot
- Wet Spot
- Other
- Special Line Features

Water Features

- Streams and Canals

Transportation

- Rails
- Interstate Highways
- US Routes
- Major Roads
- Local Roads

Background

- Aerial Photography

MAP INFORMATION

The soil surveys that comprise your AOI were mapped at 1:12,000.

Warning: Soil Map may not be valid at this scale.

Enlargement of maps beyond the scale of mapping can cause misunderstanding of the detail of mapping and accuracy of soil line placement. The maps do not show the small areas of contrasting soils that could have been shown at a more detailed scale.

Please rely on the bar scale on each map sheet for map measurements.

Source of Map: Natural Resources Conservation Service
Web Soil Survey URL:
Coordinate System: Web Mercator (EPSG:3857)

Maps from the Web Soil Survey are based on the Web Mercator projection, which preserves direction and shape but distorts distance and area. A projection that preserves area, such as the Albers equal-area conic projection, should be used if more accurate calculations of distance or area are required.

This product is generated from the USDA-NRCS certified data as of the version date(s) listed below.

Soil Survey Area: Monroe County, Wisconsin
Survey Area Data: Version 20, Sep 3, 2024

Soil map units are labeled (as space allows) for map scales 1:50,000 or larger.

Date(s) aerial images were photographed: Aug 2, 2022—Sep 28, 2022

The orthophoto or other base map on which the soil lines were compiled and digitized probably differs from the background imagery displayed on these maps. As a result, some minor shifting of map unit boundaries may be evident.

Map Unit Legend

Map Unit Symbol	Map Unit Name	Acres in AOI	Percent of AOI
116E2	Churchtown silt loam, 20 to 30 percent slopes, moderately eroded	14.6	11.5%
133B2	Valton silt loam, 2 to 6 percent slopes, moderately eroded	1.1	0.9%
133C2	Valton silt loam, 6 to 12 percent slopes, moderately eroded	0.2	0.1%
133D2	Valton silt loam, 12 to 20 percent slopes, moderately eroded	5.9	4.6%
253D2	Greenridge silt loam, 12 to 20 percent slopes, moderately eroded	5.5	4.4%
628A	Orion silt loam, 0 to 3 percent slopes, occasionally flooded	8.8	7.0%
629A	Ettrick silt loam, 0 to 2 percent slopes, frequently flooded	0.7	0.6%
676A	Kickapoo fine sandy loam, 0 to 3 percent slopes, occasionally flooded	45.8	36.1%
1125F	Dorerton, very stony-Elbaville complex, 30 to 60 percent slopes	32.3	25.4%
1155F	Brodale-Bellechester complex, 30 to 60 percent slopes, rocky	4.4	3.5%
2014	Pits, quarry, hard bedrock	5.4	4.3%
2016	Pits, quarry, soft bedrock	2.1	1.7%
Totals for Area of Interest		**126.8**	**100.0%**

ROCK RIVER LABORATORY, INC.
AGRICULTURAL ANALYSIS

710 Commerce Drive
PO Box 169
Watertown, WI 53094

Total Phosphorus Analysis 04/15/2024

Delta 3 Engineering

Field ID	Sample ID	Total P (ppm)	
~~Cashton~~	~~X-1~~	~~344~~	
~~Cashton~~	~~X-2R~~	~~241.2~~	
~~Cashton~~	~~X-3R~~	~~435.1~~	
Cashton	X-4R	326.7	Cashton Site #3
Cashton	X-5R	431.7	Cashton Site #3
Cashton	X-6R	301	Cashton Site #3
Cashton	X-7R	454	Cashton Site #3
Cashton	X-8R	449.9	Cashton Site #3
~~Cashton~~	~~X-9R~~	~~276~~	
~~Cashton~~	~~X-10R~~	~~194.8~~	
Cashton	X-11L	363.1	Cashton Site #4
Cashton	X-12L	474.5	Cashton Site #4
Cashton	X-13L	200.1	Cashton Site #4
Cashton	X-14L	421.2	Cashton Site #4
Cashton	X-115L	164.4	Cashton Site #4
Cashton	X-16L	735.3	Cashton Site #4
Cashton	X-17L	674	Cashton Site #1 & #2
Cashton	X-18L	741.2	Cashton Site #1 & #2
~~Cashton~~	~~A~~	~~2129~~	
~~Cashton~~	~~G Lasko~~	~~297.6~~	
~~Cashton~~	~~B~~	~~2109~~	

ROCK RIVER LABORATORY, INC.
AGRICULTURAL ANALYSIS

710 Commerce Drive
PO Box 169
Watertown, WI 53094

920-261-0446 phone
920-261-1365 fax
www.rockriverlab.com

Total Phosphorus Analysis 01/30/205

Field ID	Sample ID	Total P (ppm)
Melvina	Bank 1	323.3
Melvina	Bank 2	438.1

ROCK RIVER LABORATORY, INC.
AGRICULTURAL ANALYSIS

710 Commerce Drive
PO Box 169
Watertown, WI 53094

920-261-0446 phone
920-261-1365 fax
www.rockriverlab.com

Acct: 662

Total Phosphorus Analysis 04/07/2025
For: Village of Cashton

Field ID	Sample ID	Total P (ppm)
Brady Brueggen	1	117.6
Brady Brueggen	2	257.9
Brady Brueggen	3	395.8
~~Volden Property~~	~~1~~	~~310.1~~
~~Volden Property~~	~~2~~	~~323.3~~
~~Volden Property~~	~~3~~	~~248.2~~

Soil Total P

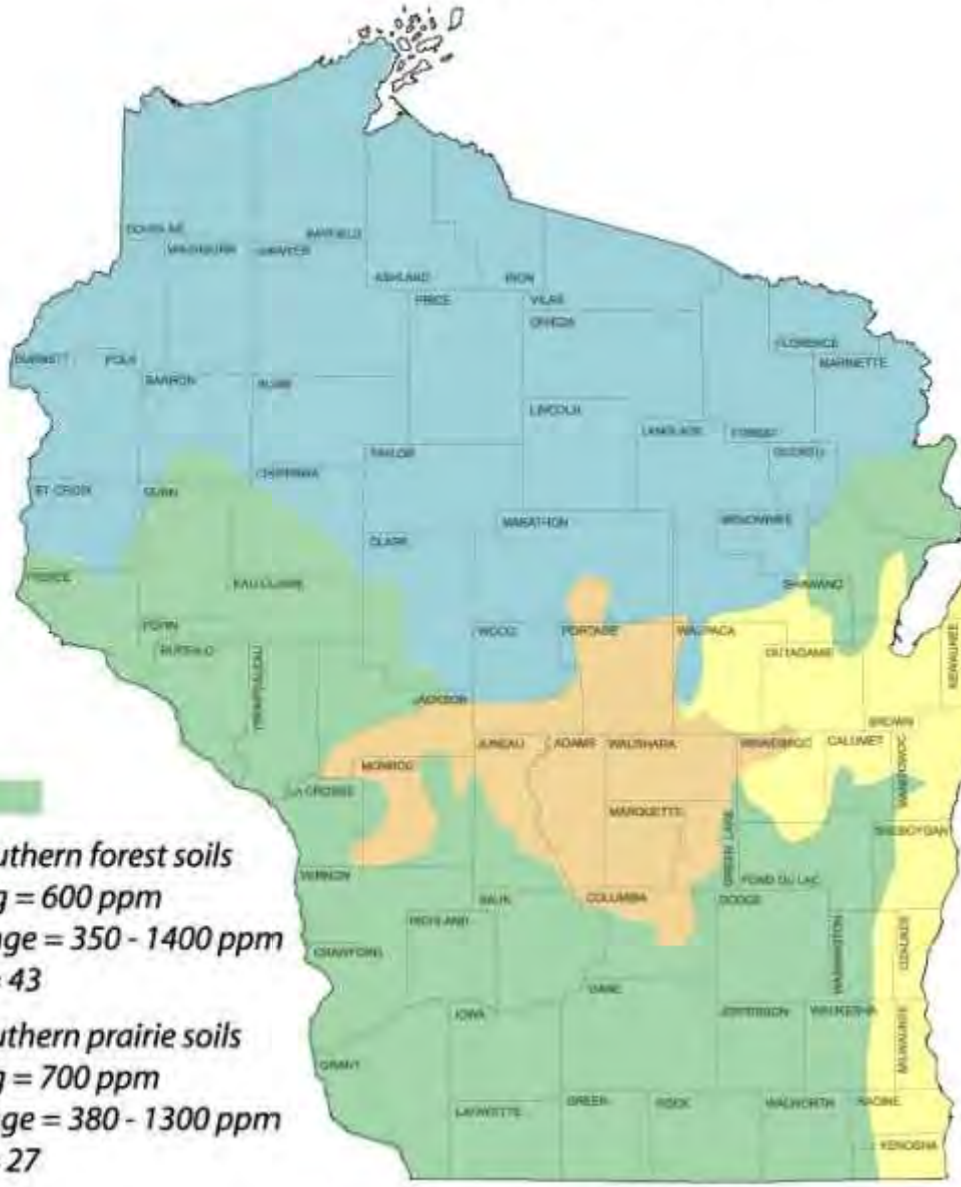

Northern loamy soils
avg = 540 ppm
range = 480-580 ppm
n = 4

Southern forest soils
avg = 600 ppm
range = 350 - 1400 ppm
n = 43

Southern prairie soils
avg = 700 ppm
range = 380 - 1300 ppm
n = 27

Eastern red soils
avg = 950 ppm
range = 430 - 2820 ppm
n = 12

Sandy soils
range = 250 - 400 ppm
n = 2

Organic soils: range = 1330 - 1350 ppm, n = 2

Attachment #12

NRCS Excel Workbook Estimating 'Other' Erosion Types June 2006

Annual soil loss predictions for conservation planning purposes are made with current soil loss prediction technology (RUSLE2). RUSLE2 estimates sheet, rill and interrill erosion. Erosion that is seasonal in nature and caused by concentrated flow, however, is not predicted by RUSLE2.

This workbook provides conservation planners with simple tools and processes to help estimate the amount of erosion occurring in ephemeral gullies, classic gullies and on streambank erosion sites.

Definitions:

Rill Erosion: consists of the removal of soil by concentrated water running through little streamlets, or headcuts. Detachment in a rill occurs if the sediment in the flow is below the amount the load can transport and if the flow exceeds the soil's resistance to detachment. As detachment continues or flow increases, rills will become wider and deeper. Rills may be of any size but are usually less than four inches deep. Rills are:

<> generally parallel on the slope, but may converge,
<> generally of uniform spacing and dimension,
<> generally appear at different locations on the landscape from year to year,
<> generally shorter than ephemeral cropland gullies,
<> usually end at a concentrated flow channel, or an area where the slope flattens and deposition occurs,
<> are on the same portion of the slope that is used to determine the length of slope (L) for RUSLE2,
<> many small, but conspicuous channels running in the direction of slope gradient

Rill erosion is considered in the RUSLE2 calculations.

Ephemeral Gully Erosion: Small erosion channels formed on crop fields as a result of concentrated flow of runoff water. These channels are routinely eliminated by tillage of the field but return following subsequent runoff events. Ephemeral Gullies are small enough to be eliminated (temporarily) with the use of typical farm tillage equipment and they:

<> recur in the same area of concentrated flow each time they form,
<> frequently form in well-defined depressions in natural drainage ways,
<> are generally wider, deeper, and longer than the rills in the field,

Ephemeral Gullies are **not** calculated by the RUSLE2 program.

Gully Erosion: Permanent gullies are formed when channel development has progressed to the point where the gully is too wide and too deep to be tilled across. These channels carry large amounts of water after rains and deposit eroded material at the foot of the gully. They disfigure landscape and make the land unfit for growing crops. Gullies:

<> may grow or enlarge from year to year by head cutting and lateral enlarging,
<> often occur in depressions or natural drainage ways,
<> may begin as ephemeral gullies that were left in the field untreated,
<> may, over time, become partially stabilized by grass, weeds or woody vegetation,

Gully erosion is not calculated by the RUSLE2 program.

Streambank Erosion: The wearing away of streambanks by flowing water. The removal of soil from streambanks is typically caused by the direct action of stream flow and/or wind/wave action, typically occurring during periods of high flow. Streambank erosion:

<> is a natural process that generally increases when unprotected streambanks (e.g. no woody vegetation) are subject to the actions of flowing water and ice damage.

<> is a common occurrence on many Vermont river channels that are experiencing geomorphic adjustments

---

The soil loss from ephemeral gullies, gullies and streambank erosion areas can be estimated by calculating the volume of soil removed by erosion processes. The volume of soil loss can be multiplied by the typical unit weight of the soil (based on soil texture) which is eroded. Approximate soil unit weights are expressed below[1]:

Soil Texture	Estimated Dry Density lb/ft^3
Gravel	110
Sand	105
Loamy Sand	100
Sandy Loam	100
Fine Sandy Loam	100
Sandy Clay Loam	90
Silt Loam	85
Silty Clay Loam	85
Silty Clay	85
Clay Loam	85
Organic	22

Procedure for estimating Ephemeral Soil Erosion:

The following formula will be used to calculate annual estimated ephemeral gully erosion:

$$\frac{\text{Ephemeral Gully } \mathbf{Length} \times \text{Gully Average } \mathbf{Width} \times \text{Gully Average } \mathbf{Depth}}{2000} \times \text{Soil Weight (lbs/ft}^3\text{)} \times \text{Occurrences per Year} = \mathbf{Estimated} \text{ Soil Loss (Tons per Year)}$$

* Ephemeral gully erosion may reform multiple times per year, and under certain conditions it may not form in a given year. The voided volume which would be calculated after a runoff event is not necessarily representative of an annual rate, but is representative of only the specific event. This erosion can be calculated for individual storms and can be summed for a yearly estimate.

1 Data from published soil surveys, laboratory data, and soil interpretation record are to be used where available. Parent materials, soil consistency, soil structure, pore space, soil texture, and coarse fragments all influence unit weight.

Procedure for estimating Gully Soil Erosion:

The following formula will be used to calculate annual estimated classic gully erosion:

$$\frac{\text{Gully } \underline{\textbf{Length}} \text{ X (Average } \underline{\textbf{Width}} \text{ X Average } \underline{\textbf{Depth}} \text{ X 0.5) X } \underline{\textbf{Soil Weight}} \text{ (lbs/ft3)}}{2000} \;/\; \text{Formation Years} = \underline{\textbf{Estimated}} \text{ Soil Loss Per Year (Tons)}$$

Procedure for estimating Streambank Soil Erosion (Direct Volume Method):

The following formula will be used to calculate annual estimated streambank erosion unless a field measurement procedure[2] is used:

$$\frac{\text{ing Bank } \underline{\textbf{Length}} \text{ X Eroding Bank } \underline{\text{Height}} \text{ X } \underline{\text{Lateral Recession Rate}} \text{ (FT/YR) X } \underline{\text{Soil Weight}} \text{ (lb}}{2000} = \underline{\textbf{Estimated}} \text{ Soil Loss Per Year (Tons)}$$

** Eroding bank height is measured along the bank, not the vertical height of bank. Example: if vertical height of an eroding streambank is 5 feet, and the bank is on a 2:1 slope, the total eroding bank distance is 25 feet -- 1/2 (Base X Height).

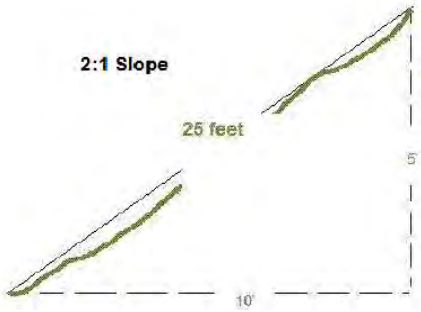

***The average annual recession rate is the thickness of soil eroded from a bank surface (perpendicular to the face) in an average year.

Stream bank erosion sometimes presents itself as a major occurance in a given year, whereas the same bank may not erode significantly for a period of years if no major runoff events occur. Recession rates need to be calculated as an average of years when erosion does and does not occur. Recession rate is not calculated as the erosion occurring after a single event.

Use available resources to assist in the estimation of recession rate: use past and present aerial photography, old survey records, and any other information that helps to determine the bank condition at known times in the past. When such information is lacking or insufficient, field observations and professional judgement are needed to estimate recession rates.
It is often not possible to directly measure recession rates in the field. Therefore, the following table has been included which relates recession rates to narrative descriptions of banks eroding at different rates (Table from NRCS Wisconsin guidance).

Lateral Recession Rate (ft/yr)	Category	Description
0.01-0.05	Slight	Some bare bank but active erosion not readily apparent. Some rills but no vegetative overhang. No exposed tree roots.
0.06-0.2	Moderate	Bank is predominantly bare with some rills and vegetative overhang. Some exposed tree roots but no slumps or slips.
0.3-0.5	Severe	Bank is bare with rills and severe vegetative overhang. Many exposed tree roots and some fallen trees and slumps or slips. Some changes in cultural features such as fence corners missing and realignment of roads or trails. Channel cross section becomes U-shaped as opposed to V-shaped.
0.5+	Very Severe	Bank is bare with gullies and severe vegetative overhang. Many fallen trees, drains and culverts eroding out and changes in cultural features as above. Massive slips or washouts common. Channel cross section is U-shaped and stream course may be meandering.

2 The best way to quantify streambank erosion is to measure it directly in the field. The basic procedure in measuring streambank erosion is to survey, flag, or in some way fix a "before" image of the channel you are evaluating in order to establish the baseline condition. Changes due to erosion can then be monitored over time by going back to the study area and re-measuring from the fixed reference points.
Channel cross-sections can be surveyed and plotted on a periodic basis to monitor change. Stakes or pins can be driven into channel banks flush with the surface. The amount of stake or pin exposed due to erosion is the amount of change at the streambank erosion site between your times of observation.
The time required to monitor a site often precludes this method of data collection. The Direct Volume Method can be used to estimate streambank erosion at your site.

Acknowledgements: This Excel workbook was created as a planning tool for use by conservation planners. The basic format and content of the tool is a compilation of various similar tools, processes and procedures employed by NRCS in several states including: Indiana, Iowa, Kansas, Maryland, Michigan, Missouri, Nebraska, Oklahoma, South Dakota and Wisconsin. Some of the terminology in the 'Definitions' section of this Readme document closely mirrors these sources.

NRCS Streambank and Irrigation Ditch Erosion Estimator (Direct Volume Method)

Farmer / Cooperator Name:	Village of Cashton	Evaluated By:	L. Hoppman
Tract Number:	Varies	Evaluation Date:	August 5, 2026

Field Number	Eroding Strmbnk Reach #; or Ditch Side/Bottom	Eroding Bank or Ditch Length (Feet)	Eroding Bank Height; or Ditch Bottom Width* (Feet)	Area of Eroding Strmbank or Ditch (FT^2)	Lateral or Ditch Bottom Recession Rate (Estimated) (FT / Year)	Estimated Volume (FT^3) Eroded Annually	Soil Texture	Approximate Pounds of Soil per FT^3	Estimated Soil Loss (Tons/Year)	Average Soil Total Phosphorus (ppm)	Estimated Phosphorus Loss (Pounds/Year)	Trade Ratio	WQT Credits
Village of Cashton (NRCS)	1	240.0	4.0	960.0	0.43	413	Sandy Clay	85	18	707.6	25	2.04:1	12
	2	370.0	8.6	3182.0	0.40	1,273	Sandy Clay	85	54	707.6	77	2.04:1	38
	3	270.0	6.7	1809.0	1.73	3,130	Sandy Clay	85	133	392.7	104	2.04:1	51
	4	210.0	7.2	1512.0	0.41	620	Sandy Clay	85	26	393.1	21	2.04:1	10
Melvina Site	1	85.0	3.0	255.0	3.80	969	Silt Loam	85	41	323.3	27	2:1	13
Brueggen Site	1	245.0	7.0	1,715.0	0.68	1,166	Sandy Loam	100	58	117.6	14	2.07:1	7
	2	130.0	7.0	910.0	0.50	455	Sandy Loam	100	23	257.9	12	2.07:1	6
	3	275.0	4.0	1,100.0	0.50	550	Sandy Loam	100	28	395.8	22	2.07:1	11
				TOTAL		**8,576**			**381**		**302**		**148**

Streambank or Ditch Erosion Calculation Formula:

$$\frac{\text{Eroding Bank/Ditch Length} \times \text{Eroding Bank Ht or Ditch Bottom Width} \times \text{Lateral or Ditch Bottom Recession Rate (FT/YR)} \times \text{Soil Weight (lbs/ft}^3\text{)}}{2000} = \text{Estimated Soil Loss Per Year (Tons)}$$

$$\text{Soil Total Phosphorus (ppm)} \times 10^{-6} \times \text{Estimated Soil Loss (Tons/Year)} \times 2000 \text{ Pounds/Ton} = \text{Estimated Phosphorus Loss Per Year (Pounds)}$$

Attachment #13

Water Quality Trading
Operation and Maintenance Plan

Introduction:
The Water Quality Trading (WQT) Operation and Maintenance (O&M) Plan is meant to be a working document and should be updated as new trading practices are implemented. Currently, the Operation and Maintenance Plan revolves around the Best Management Practice (BMP) construction along a stream/river. The attached *BMP Inspection Form* should be completed during annual inspections of BMPs and following major storm events. Inspection forms shall be retained for at least five (5) years to ensure compliance with the WQT Plan.

Publicly Owned BMP:
Village representative to complete inspection form annually and following major storm events. The form will then be provided to the Maintenance Supervisor following inspection. The Village will address maintenance issues identified during inspection within 30 days. Substantial maintenance issues may require an extended timeframe for generation of plans, specifications, and a public bid process to perform the work. Inspections and O&M activities shall be reported in the annual WQT Report sent to the DNR.

Privately Owned BMP:
Village representative to complete inspection form annually and following major storm events. The form will then be provided to the Maintenance Supervisor following inspection. The Village will address maintenance issues identified during inspection within 30 days. Substantial maintenance issues may require an extended timeframe for generation of plans, specifications, and a public bid process to perform the work. Maintenance expenses will be incurred by either by the Village or Private Property Owner depending on agreement with the Village. The Private Property Owner will be allowed to perform maintenance activities at the expense of the Private Property Owner. Inspections and O&M activities shall be reported in the annual WQT Report sent to the DNR.

Quality Assurance:
Riprap gradation and composition shall be provided for each source of material. Streambank shaping and riprap shall be installed per the Monroe County Land Conservation Department and NRCS Standards. Contractors to supply rock that is approved by the NRCS and meets criteria in Wisconsin Construction Spec.9.

Installation:
- Staking provided by the Engineer.
- Do not place riprap over frozen or spongy subgrade surfaces.
- Place riprap as indicated on Construction Plans. Do not dump rip-rap over the bank.
- Blend riprap with existing bank.
- Spread soil out in a layer of less than 4” and seed down. Do not spread soil in wetlands.
- All disturbed areas and soil must be seeded and mulched.
- When tree removal is required, swamp white oak, burr oak, or red oak trees shall be planted at a density to ultimately obtain 50% canopy closure when the trees are mature in order to maintain the riparian habitat functions.
- Install habitat structures per Plans and Specifications.

Practice Registration:
The purpose of the "Water Quality Trading Management Practice Registration" form is to report to DNR that a management practice identified in the trading plan has been properly installed and is established and effective. This information will be used to track implementation progress, verify compliance and perform audits, as necessary. A registration form should be submitted for every management practice that has been identified in the trading plan. If practices are established prior to trading plan submittal, registration forms may be submitted with the trading plan. Otherwise, registration forms should be submitted during the permit term as practices become effective or with the annual report. A blank *Water Quality Trading Management Practice Registration Form 3400-207* is attached and should be submitted following implementation of the trading practice.

Tracking Procedures:
The Village will track credits used monthly. The Village will report credit usage to the DNR on a monthly basis in the Discharge Monitoring Reports (DMRs). The annual report will summarize the 12 months of credit usage and credit generation. The Village will report to DNR any concern that they have that may result in a need to modify the trade agreement and/or this trade plan. For example, a need to generate additional credits based on discharge.

Inspections/Maintenance Considerations:

- A *BMP Inspection Form* is attached.
    - ID: As noted on Construction Plans
    - Condition of BMP:
        - Vegetative Condition: Excellent; Good; Fair; or Poor
        - Structural Condition: Excellent; Good; Fair; or Poor
        - Habitat Structure Condition: Excellent; Good; Fair; or Poor
    - Required Maintenance: Provide a description of maintenance required for the BMP.
    - Maintenance Estimate: Provide an estimate for how long the maintenance will take to complete or a dollar value for completion. This will help determine if the Village will perform the work or if the Village will hire another entity to perform the work.
    - Date Completed: Following completion of the required maintenance, input the date of completion.
    - Comments: Provide the required maintenance activity along with any other useful information. If the cell provided is not large enough for Comments, write "See Back of Sheet" and provide comments on the reverse side of the Form.
    - Photos Taken: The inspector shall take photographic evidence to represent and archive the condition of each BMP.
- Following installation, inspect the disturbed areas closely over the next few months to ensure that seeding grows.
    - Planted trees shall be monitored with the monthly BMP inspections. In the event of a tree that has been planted as part of this WQT Plan falls over, dies, or has been removed for any reason, shall be replaced immediately.
- BMPs may settle or shift especially after flooding events or freeze/thaw.
- May need to control weed and brush growth.
- Inspect stabilized areas as needed.
- At a minimum, inspect after major storm events.

- If a BMP has been damaged, repair it promptly to prevent a progressive failure.
- If repairs are needed repeatedly at a location, evaluate the site to determine if the original design conditions have changed.

Routine Maintenance Items that can be performed by Village:

- Evaluate BMP condition
    - Reconstruct/replace BMPs that have settled, shifted, or washed out.
- Manage Vegetation
    - Remove invasive/noxious plants.
    - Reseed areas as necessary
- Manage Garbage
    - Remove garbage and other debris that could otherwise impair the streambank stability.

Monthly Certification:

Each month, the Village will certify that the BMPs are maintained and operating in a manner consistent with this Water Quality Trading Plan or provide a statement noting noncompliance with this Plan. The monthly Discharge Monitoring Report (DMR) will include the following statement as a certification of compliance when the Credit Generating Practice is operating in a manner consistent with the Plan:

> "I certify that to the best of my knowledge that the management practices identified in the approved water quality trading plan as the source of phosphorus credits is installed, established and properly maintained."

Annual Inspection:

An annual inspection of the BMPs will be performed by a licensed Professional Engineer to ensure that the BMPs are functioning as intended in order to meet the requirements of the WQT Plan.

Noncompliance:

The Village will notify DNR by telephone call to DNR's regional wastewater compliance engineer within 24 hours or next business day of becoming aware that phosphorus credits used or intended for use by Village are not being generated as outlined in this Water Quality Trading Plan.

The Village will submit a written notification within five days after the Village recognizes that the phosphorus credits are not being generated as outlined in the Trading Plan. DNR may waive the requirement for submittal for a written notice within five days and instruct the Village to submit the written notice with the next regularly scheduled monitoring report required by Village's WPDES Permit.

The written notification should include:

- Description of noncompliance and cause.
- Period of noncompliance including dates and times.
- Schedule for attaining compliance including time and steps toward compliance.
- Plan to prevent reoccurrence of the noncompliance.

Notification of Trade Agreement Termination:
If a trade agreement or the trading plan needs to be terminated during the permit term, the permittee should submit a Notice of Termination to the wastewater engineer/specialist to inform DNR of the termination. DNR staff should use this information to determine if a permit modification is required due to the termination, the termination will result in non-compliance, or other permit actions are required due to the termination. When credits are reduced or eliminated for any reason, the permittee is still required to meet their WQBELs without any grace period. To prevent noncompliance with WQBELs, changes to trading plans must be addressed before credits are lost. Modifying the permit/trading plan will require at least 180 days. A blank *Notification of Water Trade Agreement Termination Form 3400-209* is attached and should be submitted to DNR prior to practice termination, no later than the submittal date of the annual report.

State of Wisconsin
Department of Natural Resources
101 South Webster Street
Madison WI 53707-7921
dnr.wi.gov

Water Quality Trading Management Practice Registration

Form 3400-207 (R 1/14)

Notice: Pursuant to s. 283.84, Wis. Stats., this form must be completed by any WPDES permittee that is using water quality trading as a method of complying with a permit limitation. Failure to complete this form would not result in penalties. Personal information collected will be used for administrative purposes and may be provided to requesters to the extent required by Wisconsin's Open Records Law (ss. 19.31 - 19.39, Wis. Stats.).

Applicant Information

Permittee Name	Permit Number WI-	Facility Site Number

Facility Address	City	State	ZIP Code

Project Contact Name (if applicable)	Address	City	State	ZIP Code

Project Name

Broker/Exchange Information (if applicable)

Was a broker/exchange be used to facilitate trade? ◯ Yes ◯ No

Broker/Exchange Organization Name	Contact Name

Address	Phone Number	Email

Trade Registration Information (Use a separate form for each trade agreement)

Type	Trade Agreement Number	Practices Used to Generate Credits	Anticipated Load Reduction	Trade Ratio	Method of Quantification
◯ Urban NPS ◯ Agricultural NPS ◯ Other					

County	Closest Receiving Water Name	Land Parcel ID(s)	Parameter(s) being traded

The preparer certifies all of the following:

- I have completed this document to the best of my knowledge and have not excluded pertinent information.
- I certify that the information in this document is true to the best of my knowledge.

Signature of Preparer	Date Signed

Authorized Representative Signature

I certify under penalty of law that this document and all attachments were prepared under my direction or supervision. Based on my inquiry of those persons directly responsible for gathering and entering the information, the information is, to the best of my knowledge and belief, accurate and complete. I am aware that there are significant penalties for submitting false information, including the possibility of fine and imprisonment for knowing violations.

Signature of Authorized Representative	Date Signed

Leave Blank – For Department Use Only

Date Received		Trade Docket Number
Entered in Tracking System ☐ Yes	Date Entered	Name of Department Reviewer

State of Wisconsin
Department of Natural Resources
101 South Webster Street
Madison WI 53707-7921
dnr.wi.gov

Notification of Water Trade Agreement Termination

Form 3400-209 (1/14)

Notice: Pursuant to s. 283.84, Wis. Stats., and ch. NR 217 Wis. Adm. Code, this form must be completed by any WPDES permittee that is using water quality trading as a method of complying with a permit limitation. Failure to complete this form would not result in penalties. Personal information collected will be used for administrative purposes and may be provided to requesters to the extent required by Wisconsin's Open Records Law (ss. 19.31 - 19.39, Wis. Stats.).

Applicant Information

Permittee Name	Permit Number WI-	Facility Site Number

Facility Address	City	State	ZIP Code

Project Contact Name (if applicable)	Address	City	State	ZIP Code

Project Name

Credit Generator Information

Credit generator type (select all that apply):

- ☐ Permitted Discharge (non-MS4/CAFO)
- ☐ Permitted MS4
- ☐ Permitted CAFO
- ☐ Urban nonpoint source discharge
- ☐ Agricultural nonpoint source discharge
- ☐ Other - Specify:

Trade Agreement number(s) to be terminated including affected land parcel ID(s):

Amount of trading credit being terminated	Effective date of termination

Reason for termination

Is this agreement being updated or replaced?

- ◯ Yes
- ◯ No
- ◯ Unsure

Will this termination result in non-compliance with the effective limit or other permit requirements?

- ◯ Yes; Name: _____
- ◯ No
- ◯ Unsure

The preparer certifies all of the following:

- I am familiar with the specifications submitted for this application, and I believe all applicable items in this checklist have been addressed.
- I have completed this document to the best of my knowledge and have not excluded pertinent information.

Signature of Preparer	Date Signed

Authorized Representative Signature

I certify under penalty of law that this document and all attachments were prepared under my direction or supervision. Based on my inquiry of those persons directly responsible for gathering and entering the information, the information is, to the best of my knowledge and belief, accurate and complete. I am aware that there are significant penalties for submitting false information, including the possibility of fine and imprisonment for knowing violations.

Signature of Authorized Representative	Date Signed

DELTA 3
Platteville, Wisconsin
Dubuque, Iowa
P 608.348.5355
P 563.542.9005
E mail@delta3eng.biz
W www.delta3eng.biz

Streambank BMP Inspection Form

Date & Time:	
Inspector/Title:	
Weather:	
Reason for Inspection:	Monthly ☐ Precipitation Event ☐ Annual P.E. ☐ Other ☐:
Last Inspection Photos Date*:	

* inspection photos should be taken annually at minimum

ID	Vegetative Condition	Structural Condition	Habitat Structure Condition	Required Maintenance	Maintenance Estimate (Time and/or Cost)	Date Maintenance Completed	Comments

Photos Taken? ☐ Yes ☐ No

Attachment #14

USDA United States Department of Agriculture
Natural Resources Conservation Service

WISCONSIN STANDARD
DRAWING NO. WI-001C 03/16

CONSTRUCTION PLAN

PRACTICE(S) STREAMBANK PROTECTION(580) OBSTRUCTION REMOVAL(500)

LANDOWNER VILLAGE OF CASHTON

ADDRESS PO BOX 188 CASHTON, WI 54619 SITE: 26818 MARKET RD

LANDOWNER PHONE NO. 608-487-2663 COUNTY MONROE

TOWNSHIP PORTLAND T 15 N, R 4 W, Sec. 12

FIELD OFFICE SPARTA TELEPHONE NO. 608-269-8974

DIGGERS HOTLINE

Call 3 Work Days
Before You Dig!

Nationwide
811

Toll Free
1-800-242-8511

TDD
1-800-542-2289

Website
www.diggershotline.com



N

Not to Scale

LOCATION MAP

NOTICE TO LANDOWNERS AND EXCAVATORS

Any representation made by the USDA, Natural Resources Conservation Service, or the MONROE County LCD, as to the approximate location or nonexistence of above or under ground hazards does not relieve the owner of the property or the excavator that is hired to complete construction, from notifying Diggers Hotline of the pending construction. You will be liable for damages resulting from construction activities.
Call Diggers Hotline! Ticket Number _____

CONSTRUCTION DRAWINGS AND SPECIFICATIONS ACCEPTANCE

I have reviewed and understand the construction plans and specifications and agree to complete the work accordingly. Failure to meet these plans and specifications may jeopardize any continued NRCS technical assistance or program cost sharing applied for. I understand that it is my responsibility to secure all necessary permits and licenses, and to complete the work in accordance with all local, state, and federal laws. Modification of these construction plans or specifications must be approved by the NRCS before installation. I assume all responsibility for negotiations and contract agreements with the construction contractors.

Landowner Signature: _____ Date: 5/29/25

Designed by: TOM TORKELSON Date: 2/11/25

Checked by: Lily Lefebvre Date: 2/15/25

Approved by: Kelli Neitzel Digitally signed by Kelli Neitzel Date: 2025.03.13 16:19:21 -05'00' Date: 3/13/2025

The installed practices comply with applicable NRCS technical standards and specifications. The "redlined" construction plans (as-built drawings) reflect changes made during construction.

Construction Approved by: _____ Date: _____

Job Approval Class 580(IV) 500(V)

Sheet 1 of 14

ESTIMATED QUANTITIES

ITEM	UNIT	QUANTITY	SHEET NUMBER	WI CONSTRUCTION SPEC. OR JOB SHEET NUMBER
STREAMBANK PROTECTION(580)				
ROCK RIPRAP	LN FT	880		009. ROCK RIPRAP
	CU YDS	1030		
BANK SHAPING	LN FT	320		002. EXCAVATION
INSTREAM HABITAT(395)				
ROOTWADS	NO.	1		014. TIMBER FABRICATION AND INSTALLATION
RANDOM BOULDERS	NO.	2		009. ROCK RIPRAP
LUNKERS	NO.	3		014. TIMBER FABRICATION AND INSTALLATION
OBSTRUCTION REMOVAL(500)				
TREE AND SHRUB REMOVAL	ACRE	0.2		016. STREAM CLEARING AND SNAGGING
CRITICAL AREA PLANTING(342)				
SEEDING NORMAL TILLAGE	ACRE	0.9		WI-710 SEEDING ESTABLISHMENT
MULCHING(484)				
NATURAL STRAW MATERIAL	SQ FT	36000		WI-710 SEEDING ESTABLISHMENT

QUANTITIES ARE ESTIMATED TO THE NEAT LINES AND GRADES OF IN-PLACE MATERIALS SHOWN ON THE CONSTRUCTION PLAN UNLESS OTHERWISE STATED. TRUCK YARDAGE, LOOSEFILL, SHRINKAGE, ETC..., MUST BE CALCULATED AND COMPENSATED FOR BY THE CONTRACTOR PREPARING A BID OR CONSTRUCTING.

USDA United States Department of Agriculture
Natural Resources Conservation Service

ESTIMATED QUANTITIES

CLIENT: VILLAGE OF CASHTON
COUNTY: MONROE

		Date
Designed	TWT	2/25
Drawn	TWT	2/25
Checked		
Approved		

Version 9-2019

CONSTRUCTION NOTES

1. A preconstruction meeting shall be scheduled with Monroe County LCD personnel, the contractor, and the landowner prior to construction start-up. Contractor shall notify the Sparta LCD office (608-269-8974) at least one week prior to the start of construction.

2. Contact County Planning and Zoning Department and Local Township for possible permits. Landowner must receive the DNR and all other required permits prior to start of construction.

3. **Contact Diggers Hotline at least 3 days prior to start of construction. (800) 242-8511** Notification of affected utility companies is the responsibility of the contractor.

4. All estimated quantities are based on neat lines and grades unless otherwise stated. Technician will stake the project prior to construction.

5. Trees and other debris located along streambanks will be removed as directed by technician throughout length of project area. Trees and debris will be disposed of in an area agreed upon by the landowner and technician outside of the floodplain.

6. Any remaining spoil from shaping streambanks shall not be placed in any wetlands, low spots, or floodplain. Spoils should be hauled offsite or placed in an area **approved by the technician.**

7. Contractor is required to track in all topsoil perpendicular to the stream on sideslopes to within 1' of the water's edge.

8. Rock riprap must be from a tested and approved quarry. Contractor must provide the technician with the proposed rock source quarry name prior to the start of construction to verify its approval.

9. Key in upstream and downstream ends of the rip rap. Provide smooth transitions from bank slope face to rock face.

10. Technician must be on site during placement of all Stream Habitat.

11. All disturbed areas will be mulched and seeded according to seeding plan.

12. Contractor will be responsible for correcting problems which occur as the result of not following proper construction procedures.

USDA United States Department of Agriculture Natural Resources Conservation Service	CONSTRUCTION NOTES CLIENT: VILLAGE OF CASHTON COUNTY: MONROE	Designed TWT 2/25 Drawn TWT 2/25 Checked Approved	Drawing Name WI-011 Date 06/14 Sheet 3 of 14

USDA United States Department of Agriculture
Natural Resources Conservation Service

PLAN VIEW

CLIENT: VILLAGE OF CASHTON
COUNTY: MONROE

		Date
Designed	TWT	2/25
Drawn	TWT	2/25
Checked		
Approved		

Drawing Name WI-012
Date 06/14
Sheet 4 of 14

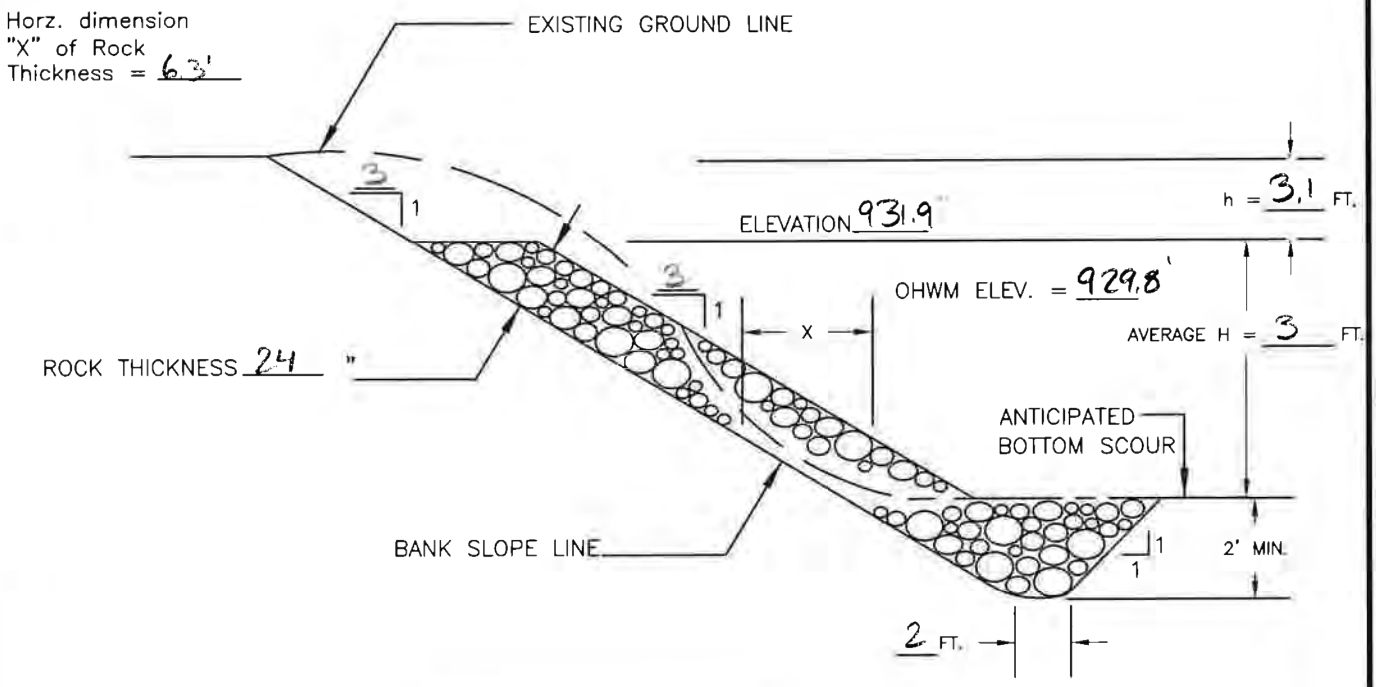

TYPICAL CROSS SECTION

GRADATION OF ROCK

PERCENT PASSING BY WEIGHT	SIZE (INCHES)
100	16
60–85	12
25–50	8
5–20	4
0–5	2

QUANTITY ESTIMATE*

BANK SLOPING FOR RIPRAP	240	LIN. FT.
BANK SLOPING (SEEDING ONLY)	—	LIN. FT.
ROCK FOR RIPRAP (WI CONST. SPEC. 9)	282	CU. YD.
SEEDING	0.2	ACRES

*ESTIMATED TO THE NEAT LINES AND GRADE

NOTES:

1. DOUBLE THE ROCK THICKNESS FOR A DISTANCE OF 5 FEET AT THE UPSTREAM AND DOWNSTREAM ENDS OF THE RIPRAP. BLEND THE ROCK SURFACE TO MATCH THE EXISTING STABLE BANK SURFACE.

THIS STANDARDIZED DESIGN MUST BE ADAPTED TO THE SPECIFIC SITE.

EXCAVATED KEYWAY

SITE Bank 1

USDA United States Department of Agriculture Natural Resources Conservation Service	STREAMBANK PROTECTION NO FILTER OR GEOTEXTILE (PARTIAL BANK HEIGHT) CLIENT: VILLAGE OF CASHTON COUNTY: MONROE	Designed TWT Date 2/25 Drawn TWT 2/25 Checked Approved	File Name WI-404E Date 07/14 Sheet 5 of 14

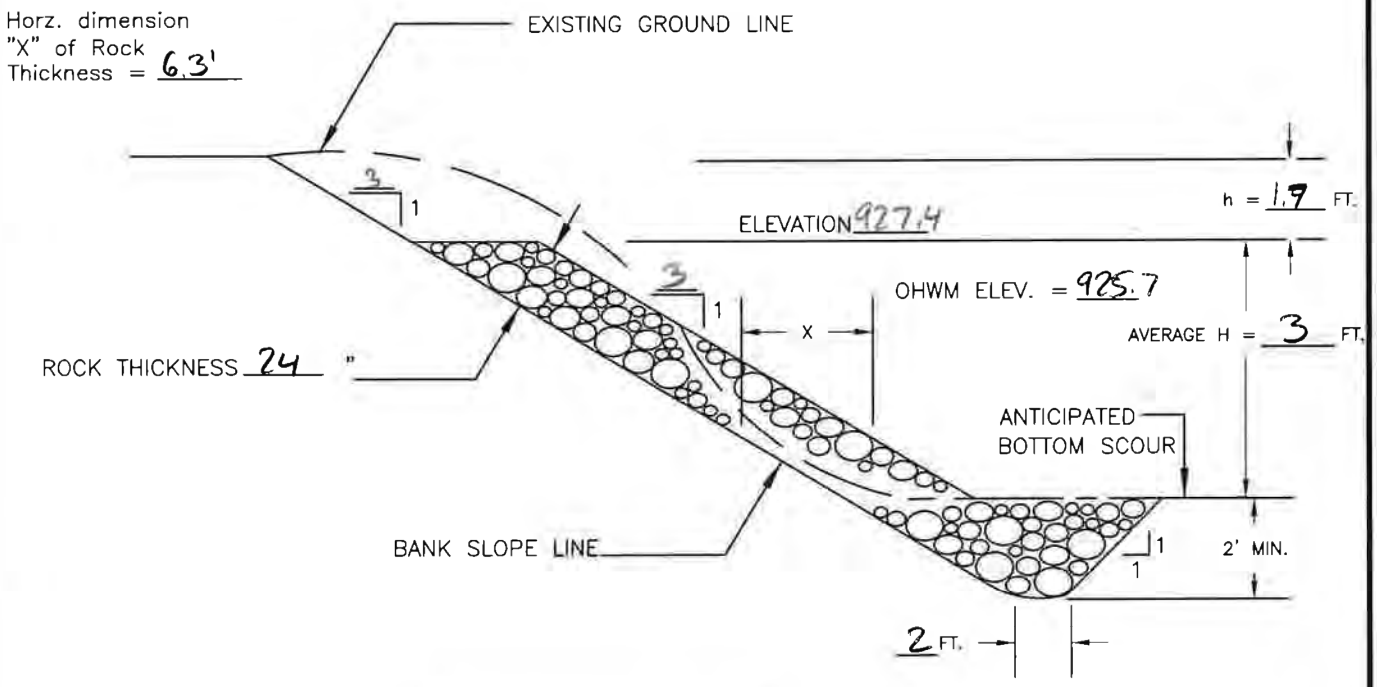

TYPICAL CROSS SECTION

GRADATION OF ROCK

PERCENT PASSING BY WEIGHT	SIZE (INCHES)
100	16
60–85	12
25–50	8
5–20	4
0–5	2

QUANTITY ESTIMATE*

BANK SLOPING FOR RIPRAP	370	LIN. FT.
BANK SLOPING (SEEDING ONLY)	110	LIN. FT.
ROCK FOR RIPRAP (WI CONST. SPEC. 9)	431	CU. YD.
SEEDING	0.2	ACRES

*ESTIMATED TO THE NEAT LINES AND GRADE

NOTES:

1. DOUBLE THE ROCK THICKNESS FOR A DISTANCE OF 5 FEET AT THE UPSTREAM AND DOWNSTREAM ENDS OF THE RIPRAP. BLEND THE ROCK SURFACE TO MATCH THE EXISTING STABLE BANK SURFACE.

THIS STANDARDIZED DESIGN MUST BE ADAPTED TO THE SPECIFIC SITE.

EXCAVATED KEYWAY

SITE Bank 2

United States Department of Agriculture
Natural Resources Conservation Service

STREAMBANK PROTECTION NO FILTER OR GEOTEXTILE (PARTIAL BANK HEIGHT)

CLIENT: VILLAGE OF CASHTON

COUNTY: MONROE

		Date
Designed	TWT	2/25
Drawn	TWT	2/25
Checked		
Approved		

File Name WI-404E

Date 07/14

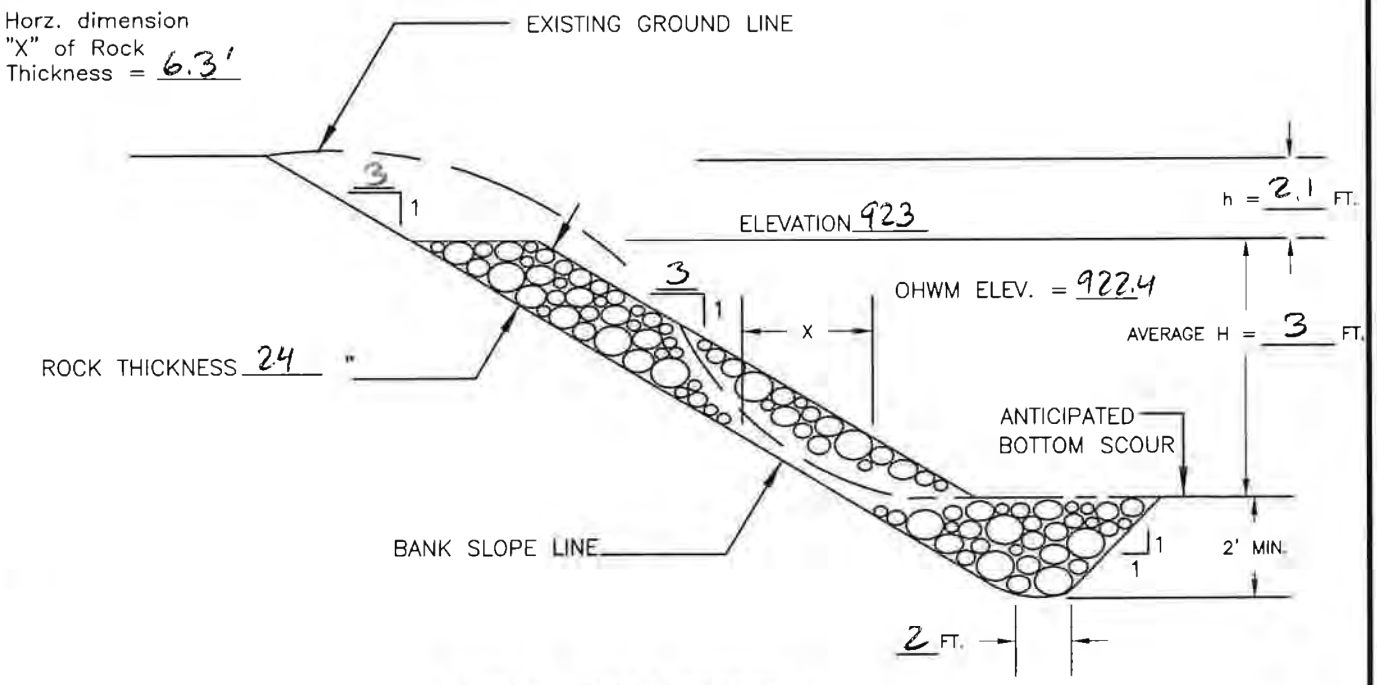

TYPICAL CROSS SECTION

GRADATION OF ROCK

PERCENT PASSING BY WEIGHT	SIZE (INCHES)
100	16
60–85	12
25–50	8
5–20	4
0–5	2

QUANTITY ESTIMATE*

BANK SLOPING FOR RIPRAP	270	LIN. FT.
BANK SLOPING (SEEDING ONLY)	–	LIN. FT.
ROCK FOR RIPRAP (WI CONST. SPEC. 9)	317	CU. YD.
SEEDING	0.2	ACRES

*ESTIMATED TO THE NEAT LINES AND GRADE

NOTES:

1. DOUBLE THE ROCK THICKNESS FOR A DISTANCE OF 5 FEET AT THE UPSTREAM AND DOWNSTREAM ENDS OF THE RIPRAP. BLEND THE ROCK SURFACE TO MATCH THE EXISTING STABLE BANK SURFACE.

THIS STANDARDIZED DESIGN MUST BE ADAPTED TO THE SPECIFIC SITE.

EXCAVATED KEYWAY

SITE Bank 3

USDA United States Department of Agriculture Natural Resources Conservation Service	STREAMBANK PROTECTION NO FILTER OR GEOTEXTILE (PARTIAL BANK HEIGHT) CLIENT: VILLAGE OF CASHTON COUNTY: MONROE	Designed TWT Date 2/25 Drawn TWT 2/25 Checked Approved	File Name WI-404E Date 07/14 Sheet 7 of 14

TYPICAL CROSS SECTION

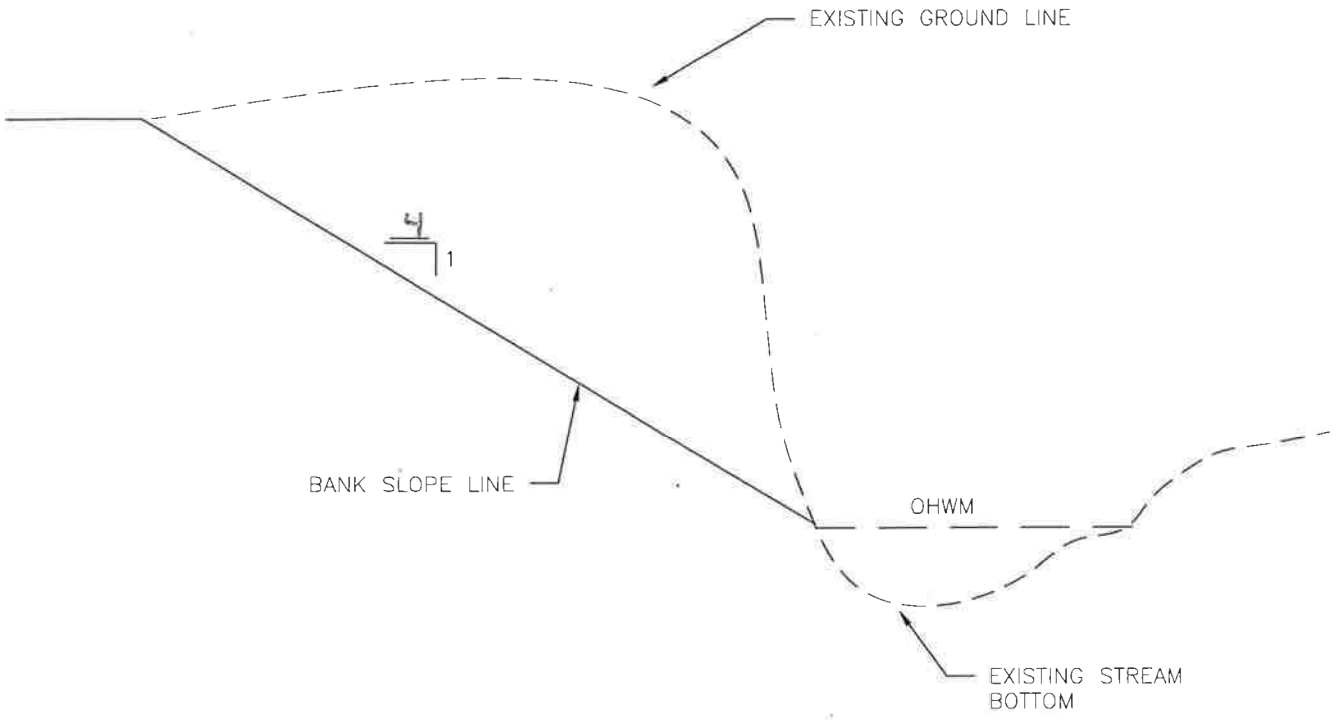

QUANTITY ESTIMATE *

BANK SLOPING	110	LIN. FT.
SEEDING AND MULCH	0.1	ACRES

* ESTIMATED TO THE NEAT LINES AND GRADE

NOTE:

1. TRACK BANKS PERPENDICULAR TO STREAM WITHIN 1' OF WATERLINE PRIOR TO SEEDING
2. ANY REMAINING SPOIL FROM SHAPING STREAMBANKS WILL BE SPREAD EVENLY ON ADJACENT LAND OUT OF THE FLOODPLAIN, APPROVED BY THE TECHNICIAN, IN A MANNER THAT ALLOWS WATER TO DRAIN FREELY, OR HAULED OFF SITE WITH AGREEMENT FROM LANDOWNER

SITE Bank 2

USDA United States Department of Agriculture Natural Resources Conservation Service	BANK SHAPING (CRITICAL AREA PLANTING) CLIENT: Village of Cashton COUNTY: Monroe	Designed TWT 2/25 Drawn TWT 2/25 Checked Approved	File Name Date 11/2016 Sheet 8 of 14

TYPICAL CROSS SECTION

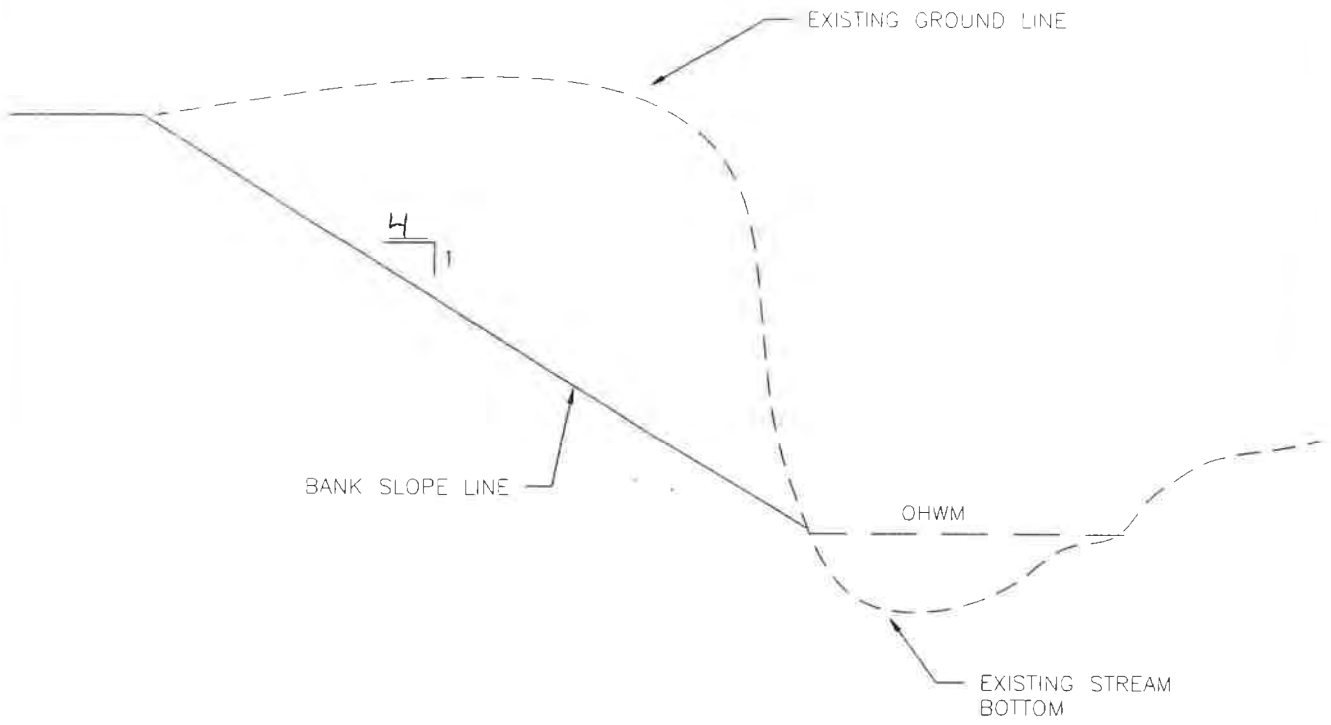

QUANTITY ESTIMATE *

BANK SLOPING	210	LIN FT.
SEEDING AND MULCH	0.2	ACRES

* ESTIMATED TO THE NEAT LINES AND GRADE

NOTE:

1. TRACK BANKS PERPENDICULAR TO STREAM WITHIN 1' OF WATERLINE PRIOR TO SEEDING
2. ANY REMAINING SPOIL FROM SHAPING STREAMBANKS WILL BE SPREAD EVENLY ON ADJACENT LAND OUT OF THE FLOODPLAIN, APPROVED BY THE TECHNICIAN, IN A MANNER THAT ALLOWS WATER TO DRAIN FREELY, OR HAULED OFF SITE WITH AGREEMENT FROM LANDOWNER

SITE Bank 4

USDA United States Department of Agriculture Natural Resources Conservation Service	BANK SHAPING (CRITICAL AREA PLANTING) CLIENT Village of Cashton COUNTY Monroe	Designed TWT Date 2/25 Drawn TWT 2/25 Checked Approved	File Name Date 11/2016 Sheet 9 of 14

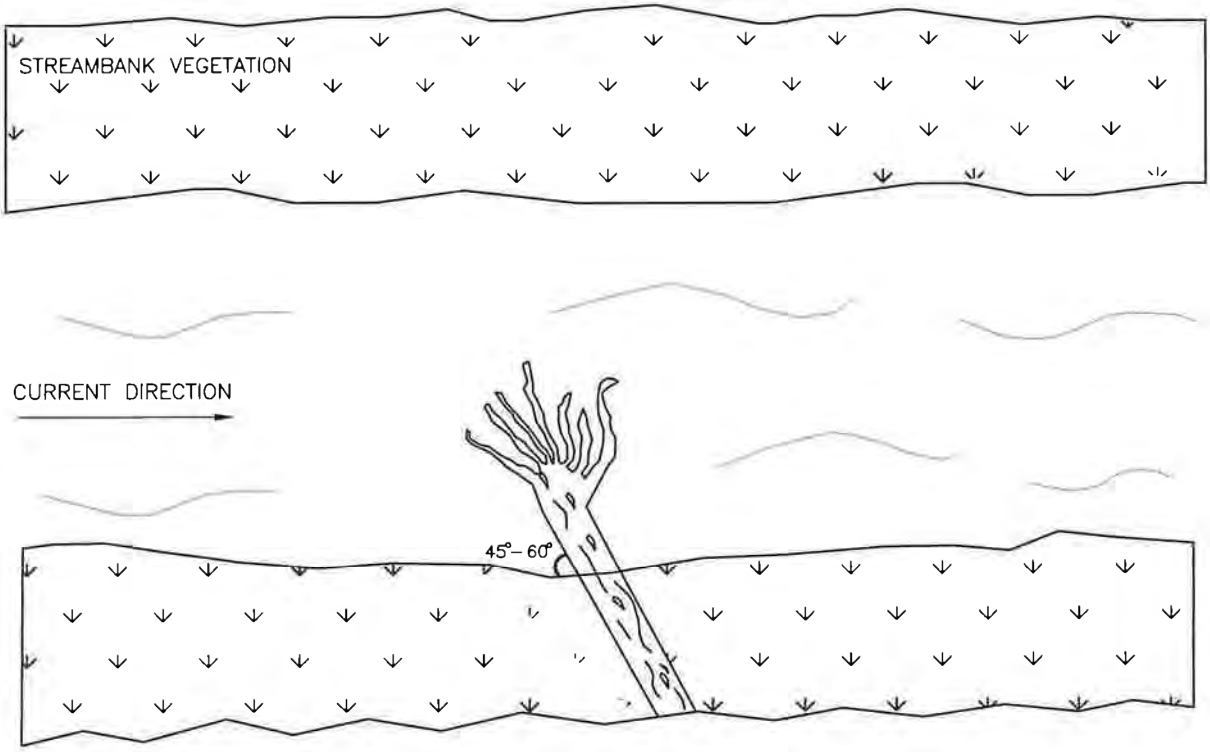

PLAN

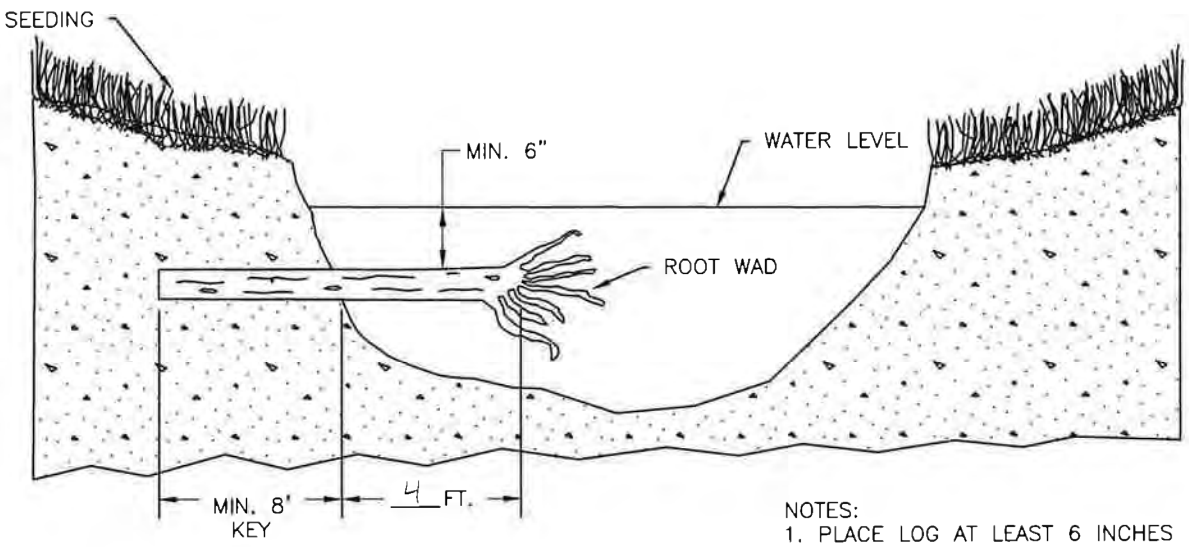

CROSS SECTION

NOTES:
1. PLACE LOG AT LEAST 6 INCHES BELOW THE WATERLINE.
2. PLACE LOG AT A 45–60 DEGREE ANGLE UPSTREAM FROM BANK.
3. REFERENCE WI STD DWG 932 FOR DETAILS ON VORTEX WEIR CONSTRUCTION.

USDA United States Department of Agriculture Natural Resources Conservation Service	ROOT WAD CLIENT: VILLAGE OF CASHTON COUNTY: MONROE	Designed TWT 2/25 Drawn TWT 2/25 Checked Approved	File Name WI-936 Date 08/14 Sheet 10 of 14

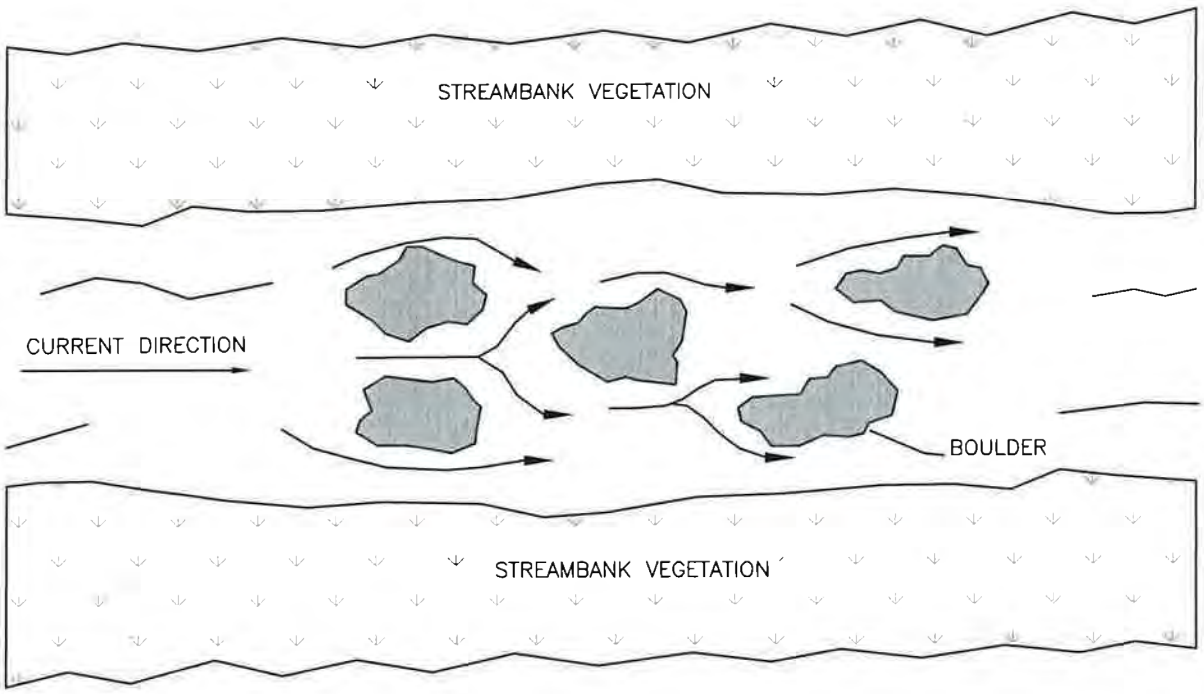

PLAN VIEW

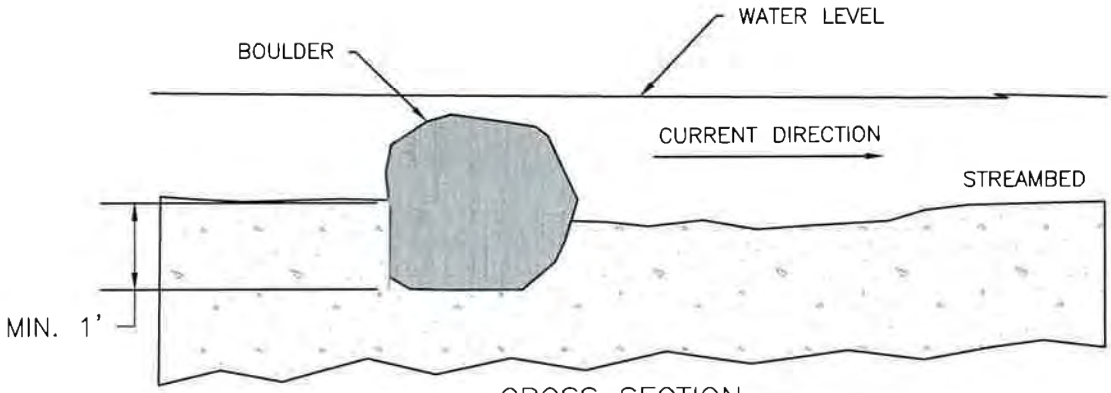

CROSS SECTION

- AVERAGE ROCK SIZE– 1.5'–3.5' DIA.–ROCK, SIZE IS SITE DEPENDENT.
- A MINIMUM OF ONE BOULDER PER SET OF BOULDERS SHOULD PROTRUDE FROM WATER SURFACE DURING TIMES OF ORDINARY FLOW TO ACT AS MID–STREAM PERCHING/LOAFING SITES.
- USE BOULDERS WITH IRREGULARITIES OR MULTIPLE BOULDERS TOGETHER TO PROVIDE SLIGHT OVERHANGING COVER.
- PLACE BOULDERS SO CURRENT WILL NOT BE DEFLECTED INTO UNPROTECTED STREAM BANKS.

USDA United States Department of Agriculture Natural Resources Conservation Service	RANDOM BOULDER PLACEMENT CLIENT: VILLAGE OF CASHTON COUNTY: MONROE	Designed TWT 2/25 Drawn TWT 2/25 Checked Approved	File Name WI–937 Date 08/14 Sheet 11 of 14

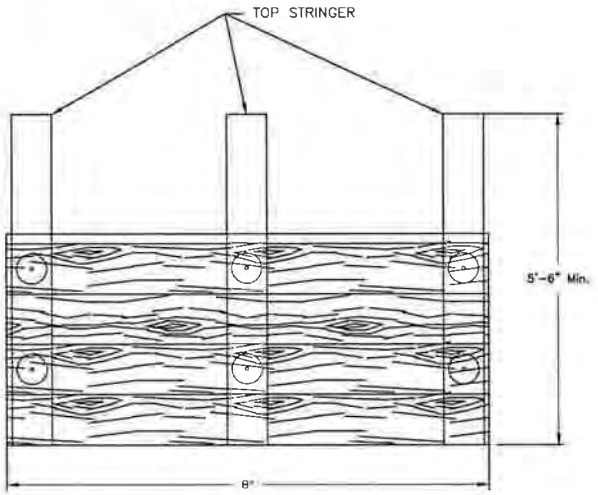

TOP VIEW

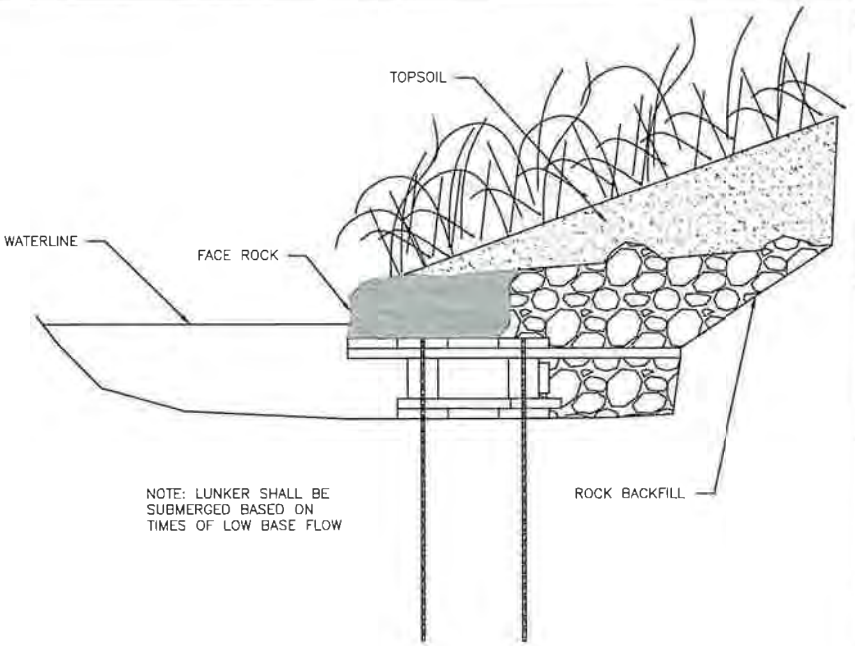

CONSTRUCTED SIDE VIEW

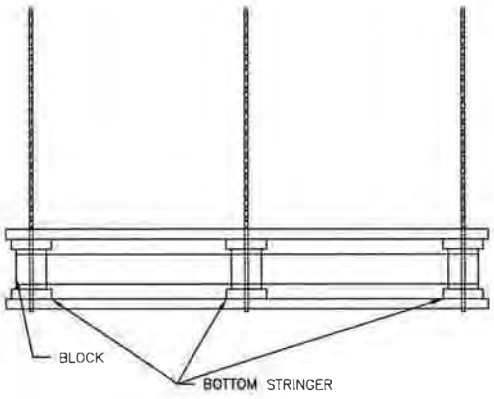

FRONT VIEW

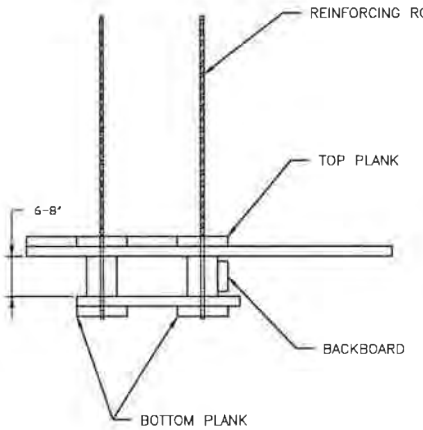

SIDE VIEW

BILL OF MATERIALS LUNKER STRUCTURE		
ITEM	SIZE	QUANTITY
TOP PLANK	2" X 8" X 8' OAK BOARD	4
TOP STRINGER	2" X 8" X 5'-6" Min OAK BOARD	3
BLOCK	6" DIA. X 8" OAK BLOCK	6
BOTTOM STRINGER	2" X 8" X 30" BOARD	3
BOTTOM PLANK	2" X 8" X 8' OAK BOARD	2
BACKBOARD	2" X 8" X 8' OAK BOARD	1
#5 REINFORCING ROD	$\frac{5}{8}$" X 5' DEFORMED STEEL	6
RINGSHANK NAILS	20D GALVANIZED	50

10 Total Boards 2" X 8" X 8 Feet Long

Designed TWT Date 2/25
Drawn TWT Date 2/25
Checked
Approved

LUNKER STRUCTURE DETAIL

CLIENT: VILLAGE OF CASHTON
COUNTY: MONROE

USDA United States Department of Agriculture
Natural Resources Conservation Service

File Name WI-930
Date 08/14
Sheet 12 of 14

SEEDING DATES — CENTRAL

TIME PERIOD	DATES			TYPE OF SEEDING
Spring	April 15	through	June 1	Permanent
Summer	June 2	through	see WI-710ss pg 2	Temporary *
Late Summer	August 1	through	August 21	Permanent
Fall	August 22	through	see WI-710ss pg 2	Temporary *
Late Fall	November 1	through	Snow Cover	Dormant
Winter	Snow Cover	through	April 14	Not Allowed

MATERIALS

If no soil test is available, apply a minimum of 150 pounds of 20-10-10 fertilizer per acre. This is equivalent to 30 pounds nitrogen (N), 15 pounds phosphate (P205), and 15 pounds potash (K2O) per acre. Apply two tons / acre of 80-89 lime or equivalent. (See page 2 for equivalent)

* Seed a temporary cover crop of Oats at 64 # /ac (2 bu/ac)
A permanent seeding shall be completed during the next acceptable time period following a temporary seeding.

MINIMUM PURE LIVE SEED (PLS) [1] RATE PER ACRE AND TOTAL POUNDS OF SEED NEEDED

	SEEDING MIX (DESIGN) 10	LOCATION: BANKS	
		ACRES: 0.90	
	SPECIES	RATE	POUNDS
	Smooth Bromegrass	14.0	12.6
	Timothy	3.0	2.7
	Red Clover	3.0	2.7
	Perennial Ryegrass	4.0	3.6
**	Oats	64.0	57.6

SEEDING MIX (AS-BUILT)	LOCATION ACRES	
SPECIES	RATE	POUNDS

[1] PLS lbs. = (total % Germination / 100 * % Purity / 100) * Net Weight (lbs.)

ADDITIONAL SEED PERCENT: _____ %

Mulching Required Yes

** Companion Crop

Total % Germination may also be termed *Total %* Viable Seed on a tag. If a tag only shows % Germination, the user must *include percentage of the seed that germinated during the lab test* (% Germination) **plus** the *percentage of hard and/or dormant seed.* Hard seed and dormant seed are seeds that are still capable of germinating and producing a plant but did not germinate under the conditions of the test in the lab.

Additional native seeds may be required by permitting agencies. These addition are allowed.
Seed mixture shall meet all requirements of the WI weed laws.
Species identified as restricted or prohibited by law shall not be planted.
Certified seed shall be used, and the seeding rates will be based on pure live seed.
For dormant seedings, increase the seeds per square foot by 15%.

SEEDBED PREPARATION

Seedbed preparation shall immediately follow construction activities.
Prepare a fine, firm seedbed to a minimum depth of three inches. A seedbed is considered firm when a footprint penetrates less than 1/4 inch deep.

SEEDING

Inoculate legumes with the specific inoculum for the species in accordance with the manufacturer's recommendations. When using a hydroseeder, five times the recommended rate of inoculant shall be added to the hydroseeder. Inoculant shall not be mixed with liquid fertilizer.

Seed may be broadcast or drilled as appropriate to the site.
Seed, fertilize, and lime as soon as possible after construction.
Seeding perpendicular to direction of flow is required to limit erosion.

Seed grasses and legumes no more than 1/4 inch deep.

Consider seeding at a lower rate and making 2 passes to ensure more uniform distribution.

TEMPORARY SEEDING OPTIONS

Select one of the following species for temporary cover if:

1) The required seeds or plant stock are not available or
the normal permanent seeding period for the species has passed
   - Forage Sorghum - 1/2 bushel per acre (May 15-July 15)
   - Sorghum - Sudangrass Hybrid - 1 bushel per acre (May 15-July 15)
   - Sudangrass - 1 bushel per acre (May 15-July 15)
   - Winter Wheat - 2 bushels per acre (Aug 1-Oct 1)
   - Winter Cereal Rye - 2 bushels per acre (Aug 1-Oct 15)
   - Oats - 2 bushels per acre (Apr 1-Sept 1)
   - Annual Ryegrass - 20 Pounds per acre (Apr 1-Sept 1)

2) Triazine herbicide carryover will not allow establishment of permanent cover immediately.
   - Forage Sorghum - 1/2 Bushel per acre (May 15-July 15)
   - Sorghum - Sudangrass Hybrid - 1 Bushel per acre (May 15-July 15)
   - Sudangrass - 1 Bushel per acre (May 15-July 15)

DORMANT SEEDING

Seed is broadcast and incorporated, no-tilled, or drilled into the seedbed .
Seedbed preparations and conditions are similar to conventional seeding.

MULCHING

Mulching shall be done immediately after seedbed preparation and seeding.
Mulch shall be applied immediately after final grading for areas seeded at a later date.
Mulch material shall be relatively free of disease, pesticides, chemicals, noxious weed seeds, and other pests and pathogens.

Spread straw and hay mulch uniformly and at the rate of 1.5-2.0 tons per acre (60-70 bales). This application results in a layer of 6 to 7 stems, 1 to 2 inches thick, and provides a minimum 70% ground cover. Some soil surface can be seen after the application. Crimping (disking), wood cellulose fiber, tackifiers, netting, pinning, or other acceptable methods of anchoring will be used if needed to hold the mulch in place.

If other mulch materials are used, the rate of application shall meet the manufacturer's recommendations.

Two (2) tons/ac of 80-89 lime or equivalent from UW-EXT A3671

Lime Quality	Tons / AC.	Lime Quality	Tons / AC.
40-49	3.9	70-79	2.3
50-59	3.2	90-99	1.9
60-69	2.7	100+	1.6

CONSTRUCTION PLAN

PRACTICE - Streambank Protection (580), Critical Area Planting (342), Mulching (484)

LANDOWNER - Village of Melvina

LANDOWNER ADDRESS - 604 Central Drive Cashton, WI 54619

LANDOWNER PHONE - 608-632-9949 **COUNTY -** Monroe

TOWNSHIP - Jefferson **T** 15 **N, R** 3 **W, SEC.** 7

FIELD OFFICE - Sparta **TELEPHONE NO. -** 608-269-8976

LOCATION MAP



N

Not to Scale

DIGGERS HOTLINE

Call 3 Work Days Before You Dig!
Toll Free
1-800-242-8511

Internet
http://www.diggershotline.com

Utilities: Any representation made by the USDA, Natural Resources Conservation Service, or the Monroe County LCD, as to the approximate location or nonexistence of above or underground hazards does not relieve the owner of the property or the excavator that is hired to complete construction, from notifying Digger's Hotline of the pending construction. You will be liable for damages resulting from construction activities. **(Call Diggers Hotline.) Ticket #**_____

Landowner Agreement: I have reviewed and understand the construction plans and specifications and agree to complete the work accordingly. Failure to meet these plans and specifications may jeopardize any continued NRCS technical assistance or program cost sharing applied for. I understand that it is my responsibility to secure all necessary permits and licenses, and to complete the work in accordance with all local, state, and federal lows. Modification of these construction plans or specifications must be approved by the NRCS before installation. I assume all responsibility for negotiations and contract agreements with the construction contractors.

Estimated Quantities and Cost Estimate: Quantities are estimated to the neat lines and grades of in-place materials shown on the construction plan unless otherwise stated. Truck yardage, loose fill, shrinkage, etc., must be calculated and compensated for by the contractor preparing a bid or constructing the project. Agency cost estimates are based on costs of similar projects and cost of materials at the time of the estimate. Costs do not reflect spikes in material or fuel costs. NRCS highly recommends you, as the owner of the project, obtain multiple bids for a comparison to the agency cost estimate.

Signed: _____ Date: _____

Designed by: Tom Torkelson Date: 08/23

Checked by: Dan Gunderson Date: 5-9-24

Approved by: _____ Date: 5-9-24

The installed practices comply with applicable NRCS technical standards and specifications. The "redlined" construction plans (as-built drawings) reflect changes made during construction.

Construction Approved by: _____ Date: _____

Job Approval Class 580(V Shear Stress) 484(II) 342(V)

ESTIMATED QUANTITIES

ITEM	UNIT	QUANTITY	SHEET NUMBER	WI CONSTRUCTION SPEC. OR JOB SHEET NUMBER
Streambank Protection (580)				
Rock Riprap	LN FT	85	3-5	9-Rock Riprap
Bank Shaping	LN FT	190	3,4,10	2-Excavation
Instream Habitat (395)				
Random Boulders	No.	2	3,4,7	9-Rock Riprap
Critical Area Planting (342)	Acres	0.2	3,4,8,9	WI-710 SEEDING ESTABLISHMENT
Mulching (484)	Sq. Ft.	8,250	3,4,8,9	

QUANTITIES ARE ESTIMATED TO THE NEAT LINES AND GRADES OF IN-PLACE MATERIALS SHOWN ON THE CONSTRUCION PLAN UNLESS OTHERWISE STATED. TRUCK YARDAGE, LOOSEFILL, SHRINKAGE, ETC..., MUST BE CALCULATED AND COMPENSATED FOR BY THE CONTRACTOR PREPARING A BID OR CONSTRUCTING.

ver. 2/2012

NRCS
Natural Resources Conservation Service
United States Department of Agriculture

ESTIMATED QUANTITIES

CLIENT: **Village of Melvina**

COUNTY: **Monroe**

		Date
Designed	TT	
Drawn		
Checked	DMO	5/24
Approved	DMO	5/24

Drawing Name: WI-005 5/09

Date

Sheet 2 of 9

CONSTRUCTION NOTES

1. A preconstruction meeting shall be scheduled with Monroe County LCD personnel, the contractor, and the landowner prior to construction start-up. Contractor shall notify the Sparta LCD office (608-269-8974) at least one week prior to the start of construction.

2. Contact County Planning and Zoning Department and Local Township for possible permits. Landowner must receive the DNR and all other required permits prior to start of construction.

3. **Contact Diggers Hotline at least 3 days prior to start of construction. (800) 242-8511** Notification of affected utility companies is the responsibility of the contractor.

4. All estimated quantities are based on neat lines and grades unless otherwise stated. Technician will stake the project prior to construction.

5. Trees and other debris located along streambanks will be removed as directed by technician throughout length of project area. Trees and debris will be disposed of in an area agreed upon by the landowner and technician outside of the floodplain.

6. Any remaining spoil from shaping streambanks shall not be placed in any wetlands, low spots, or floodplain. Spoils should be hauled offsite or placed in an area **approved by the technician**, in a manner that allows water to drain freely.

7. Contractor is required to track in all topsoil on sideslopes to within 1' of the water's edge.

8. Rock riprap must be from a tested and approved quarry. Contractor must provide the technician with the proposed rock source quarry name prior to the start of construction to verify its approval. D50 rock size will be checked prior to delivery.

9. Key in upstream and downstream ends of the rip rap. Provide smooth transitions from bank slope face to rock face.

10. Technician must be on site during placement of Stream Habitat.

11. All disturbed areas will be mulched and seeded according to seeding plan.

12. Contractor will be responsible for correcting problems which occur as the result of not following proper construction procedures.

Streambank Protection
(580)

Designed :TT
Checked: JMC

Melvina Plan Map

Customer(s): Village of Melvina
Legal Description: T15N, R3W, Sec. 6
Village: Melvina

Field Office: Sparta Service Center
Agency: Monroe County LCD
Assisted By: Tom Torkelson



Legend

- Random Boulders
- Riprap Bank 85'
- Shaping Bank 190'

Date: 8-30-2023

0 105 210 420 630 840 Feet

N

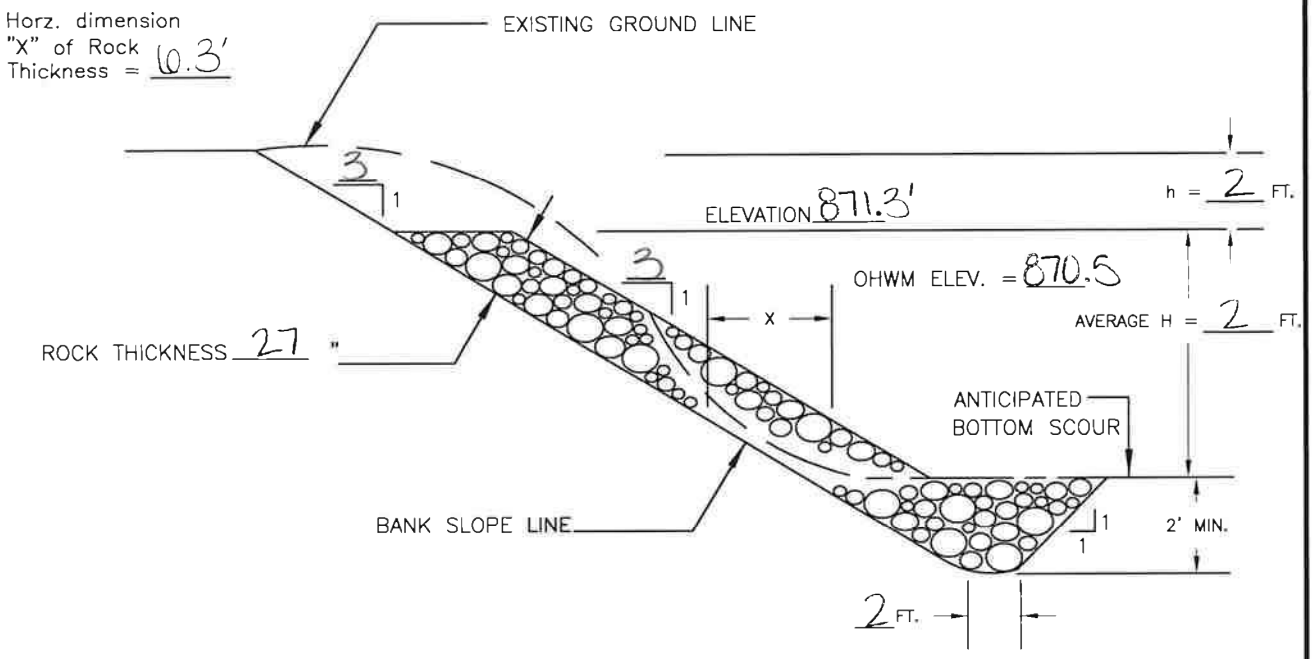

TYPICAL CROSS SECTION

GRADATION OF ROCK

PERCENT PASSING BY WEIGHT	SIZE (INCHES)
100	11.0
60–85	12
25–50	8
5–20	4
0–5	2

QUANTITY ESTIMATE*

BANK SLOPING FOR RIPRAP	85'	LIN. FT.
BANK SLOPING (SEEDING ONLY)	/	LIN. FT.
ROCK FOR RIPRAP (WI CONST. SPEC. 9)	82	CU. YD.
SEEDING	0.1	ACRES

*ESTIMATED TO THE NEAT LINES AND GRADE

NOTES:

1. DOUBLE THE ROCK THICKNESS FOR A DISTANCE OF 5 FEET AT THE UPSTREAM AND DOWNSTREAM ENDS OF THE RIPRAP. BLEND THE ROCK SURFACE TO MATCH THE EXISTING STABLE BANK SURFACE.

THIS STANDARDIZED DESIGN MUST BE ADAPTED TO THE SPECIFIC SITE.

EXCAVATED KEYWAY

SITE 1

USDA United States Department of Agriculture
Natural Resources Conservation Service

STREAMBANK PROTECTION NO FILTER OR GEOTEXTILE (PARTIAL BANK HEIGHT)

CLIENT: Village of Melvina
COUNTY: Monroe

	Date	File Name
Designed TT		WI-404E
Drawn		Date 07/14
Checked DRC	5/24	
Approved DRC	5/24	Sheet 5 of 9

TYPICAL CROSS SECTION

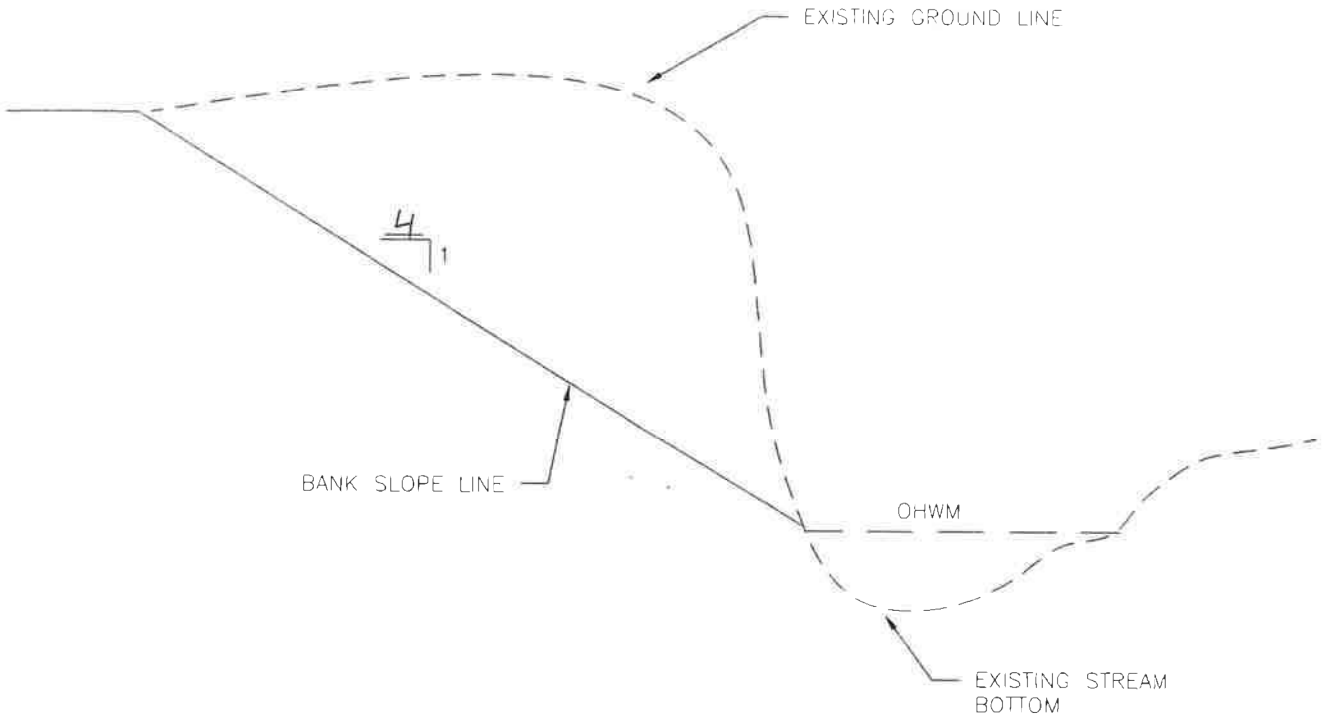

QUANTITY ESTIMATE *

BANK SLOPING	190	LIN. FT
SEEDING AND MULCH	0.1	ACRES

* ESTIMATED TO THE NEAT LINES AND GRADE

NOTE:

1. TRACK BANKS PERPENDICULAR TO STREAM WITHIN 1' OF WATERLINE PRIOR TO SEEDING
2. ANY REMAINING SPOIL FROM SHAPING STREAMBANKS WILL BE SPREAD EVENLY ON ADJACENT LAND OUT OF THE FLOODPLAIN, APPROVED BY THE TECHNICIAN, IN A MANNER THAT ALLOWS WATER TO DRAIN FREELY, OR HAULED OFF SITE WITH AGREEMENT FROM LANDOWNER

SITE 2

USDA United States Department of Agriculture Natural Resources Conservation Service	BANK SHAPING (CRITICAL AREA PLANTING) CLIENT Village of Melving COUNTY Monroe	Designed TT Date 4/23 Drawn Checked DRC 5/24 Approved DRC 5/24	File Name Date 11/2016 Sheet 6 of 9

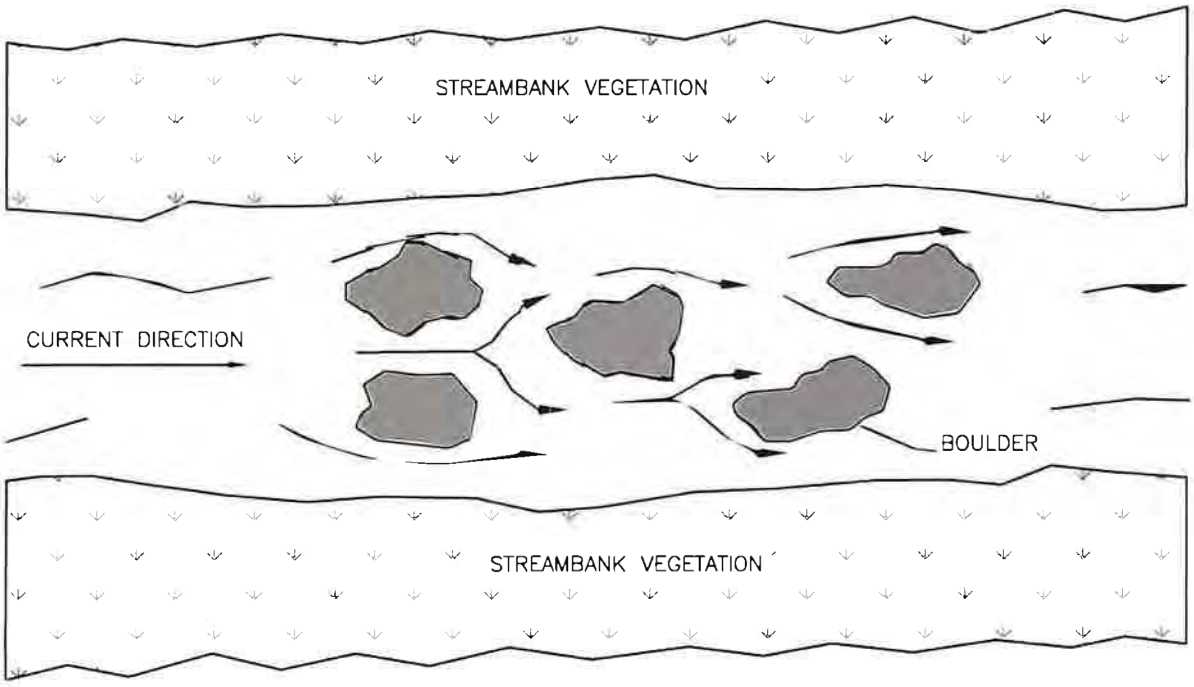

PLAN VIEW

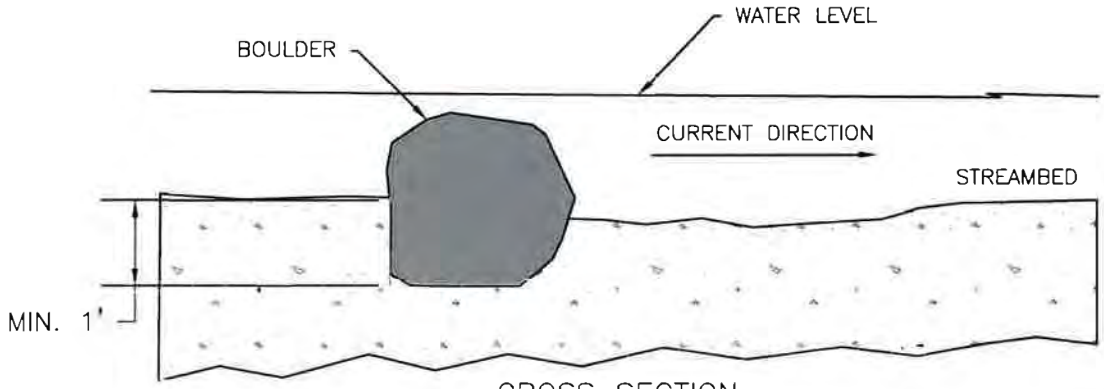

CROSS SECTION

- AVERAGE ROCK SIZE– 1.5'–3.5' DIA.–ROCK, SIZE IS SITE DEPENDENT.
- A MINIMUM OF ONE BOULDER PER SET OF BOULDERS SHOULD PROTRUDE FROM WATER SURFACE DURING TIMES OF ORDINARY FLOW TO ACT AS MID–STREAM PERCHING/LOAFING SITES.
- USE BOULDERS WITH IRREGULARITIES OR MULTIPLE BOULDERS TOGETHER TO PROVIDE SLIGHT OVERHANGING COVER.
- PLACE BOULDERS SO CURRENT WILL NOT BE DEFLECTED INTO UNPROTECTED STREAM BANKS.

USDA United States Department of Agriculture Natural Resources Conservation Service	RANDOM BOULDER PLACEMENT CLIENT: Village of Melvina COUNTY: Monroe	Date Designed TT Drawn Checked DRL 5/24 Approved DRL 5/24	File Name WI–937 Date 08/14 Sheet 7 of 9

SEEDING DATES — CENTRAL

TIME PERIOD	DATES			TYPE OF SEEDING
Spring	April 15	through	June 1	Permanent
Summer	June 2	through	see WI-710ss pg 2	Temporary *
Late Summer	August 1	through	August 21	Permanent
Fall	August 22	through	see WI-710ss pg 2	Temporary *
Late Fall	November 1	through	Snow Cover	Dormant
Winter	Snow Cover	through	April 14	Not Allowed

MATERIALS

If no soil test is available, apply a minimum of 150 pounds of 20-10-10 fertilizer per acre. This is equivalent to 30 pounds nitrogen (N), 15 pounds phosphate (P205), and 15 pounds potash (K2O) per acre. Apply two tons / acre of 80-89 lime or equivalent. (See page 2 for equivalent)

* Seed a temporary cover crop of Oats at 64 # /ac (2 bu/ac)
A permanent seeding shall be completed during the next acceptable time period following a temporary seeding.

MINIMUM PURE LIVE SEED (PLS) [1] RATE PER ACRE AND TOTAL POUNDS OF SEED NEEDED

SEEDING MIX (DESIGN) 3	LOCATION: Slopes	
	ACRES: 0.20	
SPECIES	RATE	POUNDS
Kentucky Bluegrass	1.0	0.2
Smooth Bromegrass	10.0	2.0
Timothy	2.0	0.4
Tall Fescue	2.0	0.4
Perennial Ryegrass	5.0	1.0
** Oats	64.0	12.8

SEEDING MIX (AS-BUILT)	LOCATION	
	ACRES	
SPECIES	RATE	POUNDS

[1] PLS lbs = (total % Germination / 100 * % Purity / 100) * Net Weight (lbs.)

** Companion Crop

ADDITIONAL SEED PERCENT: %

Mulching Required Yes

Total % Germination may also be termed *Total %* Viable Seed on a tag. If a tag only shows % Germination, the user must *include percentage of the seed that germinated during the lab test* (% Germination) **plus** the *percentage of hard and/or dormant seed.* Hard seed and dormant seed are seeds that are still capable of germinating and producing a plant but did not germinate under the conditions of the test in the lab.

Additional native seeds may be required by permitting agencies. These addition are allowed.
Seed mixture shall meet all requirements of the WI weed laws.
Species identified as restricted or prohibited by law shall not be planted.
Certified seed shall be used, and the seeding rates will be based on pure live seed.
For dormant seedings, increase the seeds per square foot by 15%.

SEEDBED PREPARATION

Seedbed preparation shall immediately follow construction activities.
Prepare a fine, firm seedbed to a minimum depth of three inches. A seedbed is considered firm when a footprint penetrates less than 1/4 inch deep.

SEEDING

Inoculate legumes with the specific inoculum for the species in accordance with the manufacturer's recommendations. When using a hydroseeder, five times the recommended rate of inoculant shall be added to the hydroseeder. Inoculant shall not be mixed with liquid fertilizer.

Seed may be broadcast or drilled as appropriate to the site.
Seed, fertilize, and lime as soon as possible after construction.
Seeding perpendicular to direction of flow is required to limit erosion.

Seed grasses and legumes no more than 1/4 inch deep.

Consider seeding at a lower rate and making 2 passes to ensure more uniform distribution.

TEMPORARY SEEDING OPTIONS

Select one of the following species for temporary cover if:

1) The required seeds or plant stock are not available or
the normal permanent seeding period for the species has passed
   - Forage Sorghum - 1/2 bushel per acre (May 15-July 15)
   - Sorghum - Sudangrass Hybrid - 1 bushel per acre (May 15-July 15)
   - Sudangrass - 1 bushel per acre (May 15-July 15)
   - Winter Wheat - 2 bushels per acre (Aug 1-Oct 1)
   - Winter Cereal Rye - 2 bushels per acre (Aug 1-Oct 15)
   - Oats - 2 bushels per acre (Apr 1-Sept 1)
   - Annual Ryegrass - 20 Pounds per acre (Apr 1-Sept 1)

2) Triazine herbicide carryover will not allow establishment of permanent cover immediately.
   - Forage Sorghum - 1/2 Bushel per acre (May 15-July 15)
   - Sorghum - Sudangrass Hybrid - 1 Bushel per acre (May 15-July 15)
   - Sudangrass - 1 Bushel per acre (May 15-July 15)

DORMANT SEEDING

Seed is broadcast and incorporated, no-tilled, or drilled into the seedbed .
Seedbed preparations and conditions are similar to conventional seeding.

MULCHING

Mulching shall be done immediately after seedbed preparation and seeding.
Mulch shall be applied immediately after final grading for areas seeded at a later date.
Mulch material shall be relatively free of disease, pesticides, chemicals, noxious weed seeds, and other pests and pathogens.

Spread straw and hay mulch uniformly and at the rate of 1.5-2.0 tons per acre (60-70 bales). This application results in a layer of 6 to 7 stems, 1 to 2 inches thick, and provides a minimum 70% ground cover. Some soil surface can be seen after the application. Crimping (disking), wood cellulose fiber, tackifiers, netting, pinning, or other acceptable methods of anchoring will be used if needed to hold the mulch in place.

If other mulch materials are used, the rate of application shall meet the manufacturer's recommendations.

Two (2) tons/ac of 80-89 lime or equivalent from UW-EXT A3671

Lime Quality	Tons / AC.	Lime Quality	Tons / AC.
40-49	3.9	70-79	2.3
50-59	3.2	90-99	1.9
60-69	2.7	100+	1.6

USDA United States Department of Agriculture
Natural Resources Conservation Service

WISCONSIN STANDARD
DRAWING NO. WI-001C 03/16

CONSTRUCTION PLAN

PRACTICE(S) STREAMBANK PROTECTION (580)
CRITICAL AREA STABILIZATION(342), MULCHING(484), OBS REMOVAL(500)

LANDOWNER BRADY BRUEGGEN

ADDRESS 27442 MARKET RD CASHTON, WI 54619

LANDOWNER PHONE NO. (615) 785-9961 COUNTY MONROE

TOWNSHIP PORTLAND T 15 N, R 04 W, Sec. 13

FIELD OFFICE SPARTA TELEPHONE NO. (608) 269-8976

DIGGERS HOTLINE

Call 3 Work Days
Before You Dig!

Nationwide
811

Toll Free
1-800-242-8511

TDD
1-800-542-2289

Website
www.diggershotline.com



N

Not to Scale

LOCATION MAP

NOTICE TO LANDOWNERS AND EXCAVATORS

Any representation made by the USDA, Natural Resources Conservation Service, or the MONROE County LCD, as to the approximate location or nonexistence of above or under ground hazards does not relieve the owner of the property or the excavator that is hired to complete construction, from notifying Diggers Hotline of the pending construction. You will be liable for damages resulting from construction activities.
Call Diggers Hotline! Ticket Number _____

CONSTRUCTION DRAWINGS AND SPECIFICATIONS ACCEPTANCE

I have reviewed and understand the construction plans and specifications and agree to complete the work accordingly. Failure to meet these plans and specifications may jeopardize any continued NRCS technical assistance or program cost sharing applied for. I understand that it is my responsibility to secure all necessary permits and licenses, and to complete the work in accordance with all local, state, and federal laws. Modification of these construction plans or specifications must be approved by the NRCS before installation. I assume all responsibility for negotiations and contract agreements with the construction contractors.

Landowner Signature: _____ Date: 8/6/2025

Designed by: LILY LEFEBVRE Date: 2/14/2025

Checked by: Tom Torkelson Date: 4/10/25

Approved by: Kelli Neitzel Digitally signed by Kelli Neitzel ~~Date: 2025.05.01 13:57:00 -05'00'~~ Date: 5/1/2025

The installed practices comply with applicable NRCS technical standards and specifications. The "redlined" construction plans (as-built drawings) reflect changes made during construction.

Construction Approved by: _____ Date: _____

Job Approval Class 580(II) 342(V) 484(II) 500(V)

Sheet 1 of 9

ESTIMATED QUANTITIES

ITEM	UNIT	QUANTITY	SHEET NUMBER	WI CONSTRUCTION SPEC. OR JOB SHEET NUMBER
STREAMBANK PROTECTION(580)				
ROCK RIPRAP 8" D50	LN FT	405		009. ROCK RIPRAP
	CU YDS	478		
BANK SHAPING	LN FT	110		002. EXCAVATION
CRITICAL AREA PLANTING(342)				
SEEDING NORMAL TILLAGE	AC	0.4		WI-710 SEEDING ESTABLISHMENT
MULCHING(484)				
NATURAL MATERIAL(STRAW)	SQ FT	15450		WI-710 SEEDING ESTABLISHMENT
OBSTRUCTION REMOVAL (500)				
TREES AND BRUSH	ACRE	0.4		016. STREAM CLEARING AND SNAGGING
INSTREAM HABITAT(395)				
ROOTWADS AND BOULDERS	NO.	3		009. ROCK RIPRAP

QUANTITIES ARE ESTIMATED TO THE NEAT LINES AND GRADES OF IN-PLACE MATERIALS SHOWN ON THE CONSTRUCTION PLAN UNLESS OTHERWISE STATED. TRUCK YARDAGE, LOOSEFILL, SHRINKAGE, ETC..., MUST BE CALCULATED AND COMPENSATED FOR BY THE CONTRACTOR PREPARING A BID OR CONSTRUCTING.

USDA United States Department of Agriculture
Natural Resources Conservation Service

ESTIMATED QUANTITIES

CLIENT: BRADY BRUEGGEN
COUNTY: MONROE

		Date
Designed	LEL	2/25
Drawn	LEL	2/25
Checked		
Approved		

Version 9-2019

CONSTRUCTION NOTES

1. A PRECONSTRUCTION MEETING SHALL BE SCHEDULED WITH MONROE COUNTY LCD, THE CONTRACTOR, AND THE LANDOWNER PRIOR TO CONSTRUCTION START-UP. THE CONTRACTOR SHALL NOTIFY THE MONROE COUNTY LCD OFFICE (608) 269-8976 AT LEAST ONE WEEK PRIOR TO THE START OF CONSTRUCTION.

2. CONTACT COUNTY PLANNING AND ZONING DEPARTMENT AND LOCAL TOWNSHIP FOR POSSIBLE PERMITS. LANDOWNER MUST RECIEVE THE DNR AND ALL OTHER REQUIRED PERMITS PRIOR TO THE START OF CONSTRUCTION.

3. **CONTACT DIGGERS HOTLINE AT LEAST THREE DAYS PRIOR TO THE START OF CONSTRUCTION. (800) 242-8511** OR DIIGGERSHOTLINE.COM. NOTIFICATION OF AFFECTED UTILITY COMPANIES IS THE RESPONSIBILITY OF THE CONTRACTOR.

4. ALL ESTIMATED QUANTITIES ARE BASED ON NEAT LINES AND GRADES UNLESS OTHERWISE STATED. TECHNICIAN WILL STAKE THE PROJECT PRIOR TO CONSTRUCTION.

5. ALL TREES OR STUMPS LOCATED WITHIN THE PROJECT AREAS WILL BE REMOVED AND PLACED IN AN APPROPRIATE LOCATION AS APPROVED BY LANDOWNER AND TECHNICIAN. ONLY THOSE ON THE PROJECT BANKS WILL BE REMOVED.

6. ANY REMAINING SPOIL FROM SHAPING STREAMBANKS WILL BE SPREAD EVENLY ON ADJACENT LAND, APPROVED BY THE TECHNICIAN, IN A MANNER THAT ALLOWS WATER TO DRAIN FREELY, OR HAULED OFF SITE WITH AGREEMENT FROM LANDOWNER. SPOIL **CANNOT** BE SPREAD IN A FLOODPLAIN.

7. ROCK RIPRAP MUST BE FROM A TESTED AND APPROVED QUARRY. CONTRACTOR MUST PROVIDE THE TECHNICIAN WITH THE PROPOSED ROCK SOURCE QUARRY NAME PRIOR TO THE START OF CONSTRUCTION TO VERIFY ITS APPROVAL.

8. KEY IN UPSTREAM AND DOWNSTREAM END OF THE RIPRAP. PROVIDE SMOOTH TRANSITION FROM BANK SLOPE FACE TO ROCK FACE.

9. CONTRACTOR WILL BE RESPONSIBLE FOR CORRECTING PROBLEMS WHICH OCCUR AS THE RESULT OF NOT FOLOWING PROPER CONSTRUCTION PROCEDURES.

10. ALL DISTURBED AREAS WILL BE MULCHED AND SEEDED ACCORDING TO SEEDING PLAN.



USDA United States Department of Agriculture
Natural Resources Conservation Service

PLAN VIEW

CLIENT: BRADY BRUEGGEN
COUNTY: MONROE

		Date
Designed	LEL	2/25
Drawn	LEL	2/25
Checked		
Approved		

Drawing Name: WI-011
Date: 06/14
Sheet 4 of 9

TYPICAL CROSS SECTION

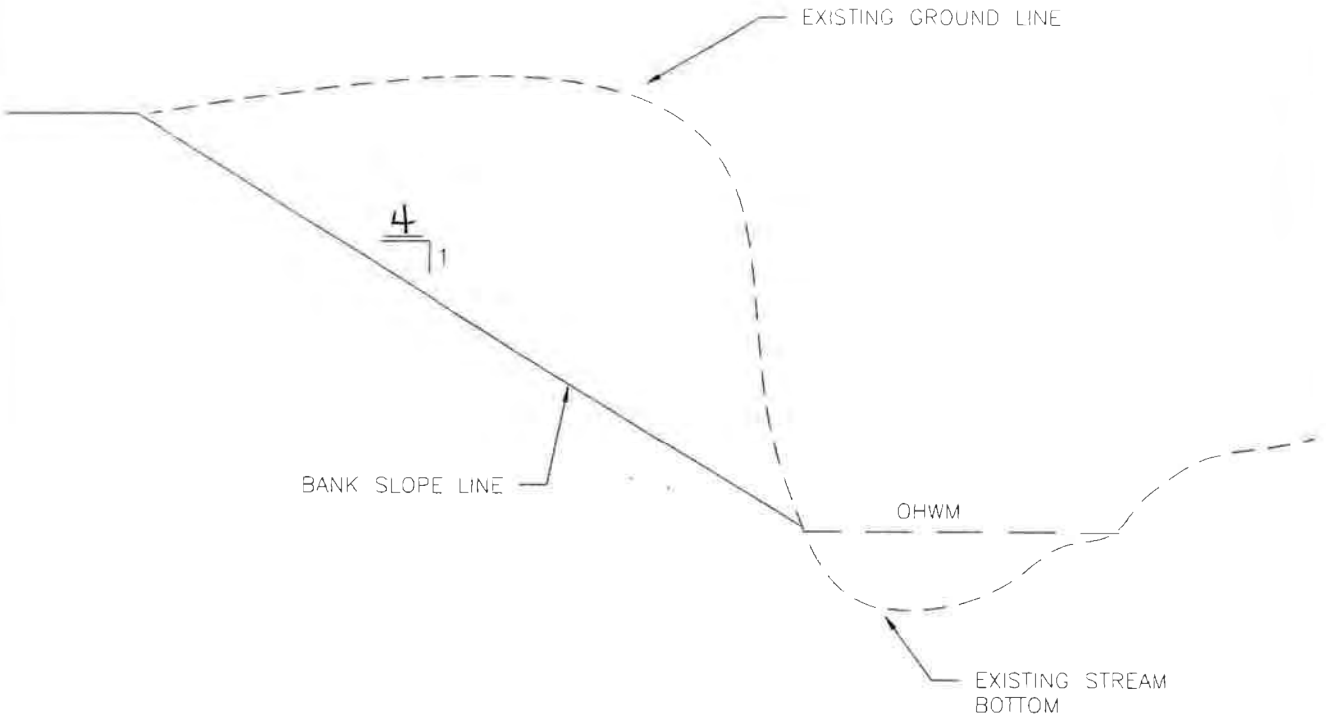

QUANTITY ESTIMATE *

BANK SLOPING	110	LIN. FT
SEEDING AND MULCH	0.1	ACRES

* ESTIMATED TO THE NEAT LINES AND GRADE

NOTE:

1. TRACK BANKS PERPENDICULAR TO STREAM WITHIN 1' OF WATERLINE PRIOR TO SEEDING
2. ANY REMAINING SPOIL FROM SHAPING STREAMBANKS WILL BE SPREAD EVENLY ON ADJACENT LAND OUT OF THE FLOODPLAIN, APPROVED BY THE TECHNICIAN, IN A MANNER THAT ALLOWS WATER TO DRAIN FREELY, OR HAULED OFF SITE WITH AGREEMENT FROM LANDOWNER

SITE Bank #1

USDA United States Department of Agriculture Natural Resources Conservation Service	BANK SHAPING (CRITICAL AREA PLANTING) CLIENT Brady Brueggen COUNTY Monroe	Designed LEL Date 2/25 Drawn Checked Approved	File Name Date 11/2016 Sheet 5 of 9

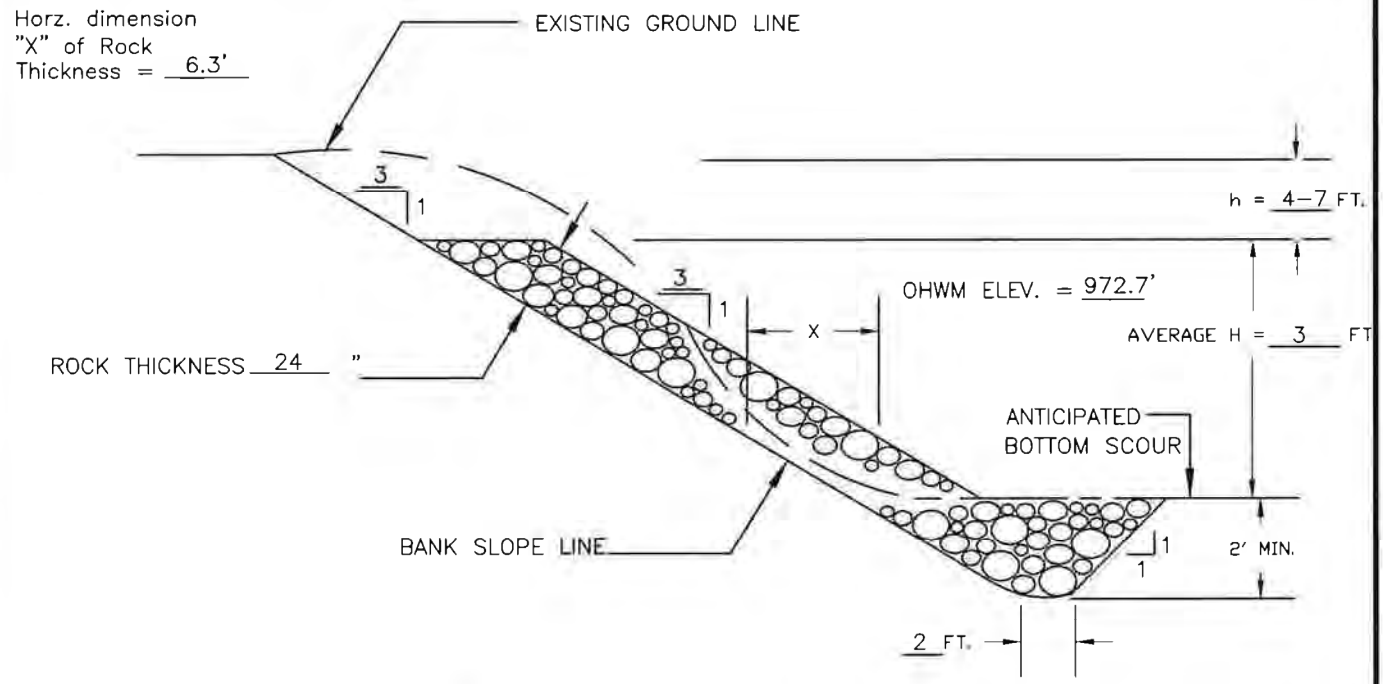

TYPICAL CROSS SECTION

GRADATION OF ROCK

PERCENT PASSING BY WEIGHT	SIZE (INCHES)
100	16
60–85	12
25–50	8
5–20	4
0–5	2

QUANTITY ESTIMATE*

BANK SLOPING FOR RIPRAP	405	LIN. FT.
BANK SLOPING (SEEDING ONLY)	110	LIN. FT.
ROCK FOR RIPRAP (WI CONST. SPEC. 9)	478	CU. YD.
SEEDING	0.3	ACRES

*ESTIMATED TO THE NEAT LINES AND GRADE

NOTES:

1. DOUBLE THE ROCK THICKNESS FOR A DISTANCE OF 5 FEET AT THE UPSTREAM AND DOWNSTREAM ENDS OF THE RIPRAP. BLEND THE ROCK SURFACE TO MATCH THE EXISTING STABLE BANK SURFACE.

THIS STANDARDIZED DESIGN MUST BE ADAPTED TO THE SPECIFIC SITE.

EXCAVATED KEYWAY

SITE BANK 2 & 3

USDA United States Department of Agriculture Natural Resources Conservation Service	STREAMBANK PROTECTION NO FILTER OR GEOTEXTILE (PARTIAL BANK HEIGHT) CLIENT: BRADY BRUEGGEN COUNTY: MONROE	Designed LEL Date 2/25 Drawn Checked Approved	File Name WI-404E Date 07/14 Sheet 10 of 9

NOTE: LUNKERS are already in stream, just face rock will be replaced as indicated on page 4.

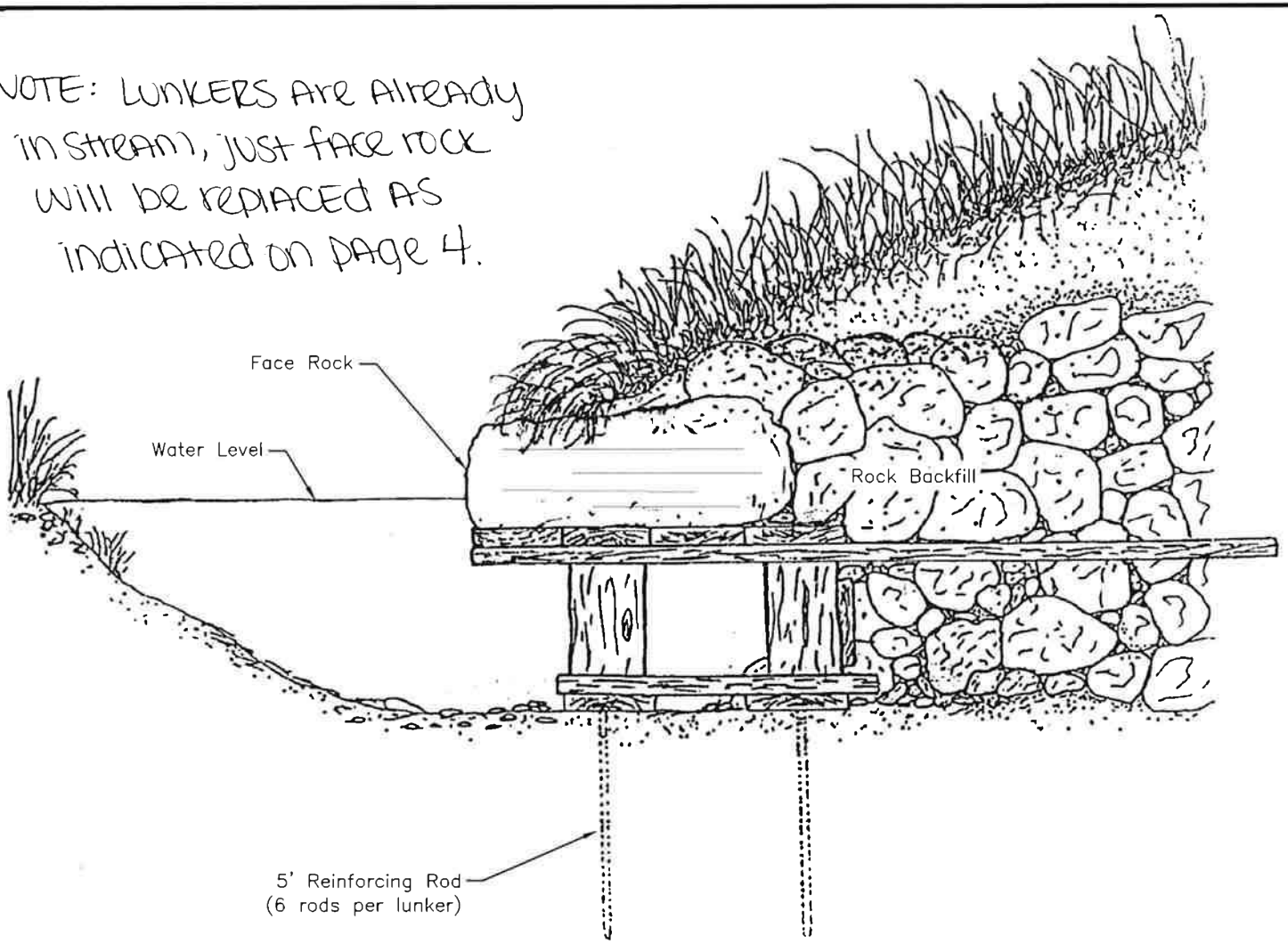

CONSTRUCTION NOTES

1. LUNKERS shall be installed level or tipped upward at face.
2. Face rock shall be placed horizontal to prevent rock decay from falling into stream.
3. Face rock should be a mimimum of _____ diameter.
4. Riprap opposite bank toe from downstream LUNKER to upstream point designated by technician.
5. Face rock can be replaced with ¼ Saw Log. Utilize a 8 lineal foot log with a minimum 10" diameter. Bolt ¼ log to front edge of lunker.

QUANTITIES

_____ No. LUNKERS

_____ No. Rebar (5/8 inch bar)

Drawing Name

Date 12/2012

Sheet 7 of 9

Designed LEL Date 2/25

Drawn

Checked

Approved

LUNKER SIDE VIEW

CLIENT: Brady Barragen

COUNTY: Monroe

NRCS
Natural Resources Conservation Service
United States Department of Agriculture

SEEDING DATES — CENTRAL

TIME PERIOD	DATES			TYPE OF SEEDING
Spring	April 15	through	June 1	Permanent
Summer	June 2	through	see WI-710ss pg 2	Temporary *
Late Summer	August 1	through	August 21	Permanent
Fall	August 22	through	see WI-710ss pg 2	Temporary *
Late Fall	November 1	through	Snow Cover	Dormant
Winter	Snow Cover	through	April 14	Not Allowed

MATERIALS

If no soil test is available, apply a minimum of 150 pounds of 20-10-10 fertilizer per acre. This is equivalent to 30 pounds nitrogen (N), 15 pounds phosphate (P205), and 15 pounds potash (K2O) per acre. Apply two tons / acre of 80-89 lime or equivalent. (See page 2 for equivalent)

* Seed a temporary cover crop of Oats at 64 # /ac (2 bu/ac)
A permanent seeding shall be completed during the next acceptable time period following a temporary seeding.

MINIMUM PURE LIVE SEED (PLS) [1] RATE PER ACRE AND TOTAL POUNDS OF SEED NEEDED

SEEDING MIX (DESIGN) 9	LOCATION: Disturbed	
	ACRES: 0.40	
SPECIES	RATE	POUNDS
Kentucky Bluegrass	3.0	1.2
Creeping Red Fescue	4.0	1.6
Perennial Ryegrass	10.0	4.0
** Oats	64.0	25.6

SEEDING MIX (AS-BUILT)	LOCATION ACRES	
SPECIES	RATE	POUNDS

[1] PLS lbs. = (total % Germination / 100 * % Purity / 100) * Net Weight (lbs.)

ADDITIONAL SEED PERCENT: %

Mulching Required Yes

** Companion Crop

Total % Germination may also be termed *Total %* Viable Seed on a tag. If a tag only shows % Germination, the user must *include percentage of the seed that germinated during the lab test* (% Germination) **plus** the *percentage of hard and/or dormant seed.* Hard seed and dormant seed are seeds that are still capable of germinating and producing a plant but did not germinate under the conditions of the test in the lab.

Additional native seeds may be required by permitting agencies. These addition are allowed.
Seed mixture shall meet all requirements of the WI weed laws.
Species identified as restricted or prohibited by law shall not be planted.
Certified seed shall be used, and the seeding rates will be based on pure live seed.
For dormant seedings, increase the seeds per square foot by 15%.

SEEDBED PREPARATION

Seedbed preparation shall immediately follow construction activities.
Prepare a fine, firm seedbed to a minimum depth of three inches. A seedbed is considered firm when a footprint penetrates less than 1/4 inch deep.

SEEDING

Inoculate legumes with the specific inoculum for the species in accordance with the manufacturer's recommendations. When using a hydroseeder, five times the recommended rate of inoculant shall be added to the hydroseeder. Inoculant shall not be mixed with liquid fertilizer.

Seed may be broadcast or drilled as appropriate to the site.
Seed, fertilize, and lime as soon as possible after construction.
Seeding perpendicular to direction of flow is required to limit erosion.

Seed grasses and legumes no more than 1/4 inch deep.

Consider seeding at a lower rate and making 2 passes to ensure more uniform distribution.

TEMPORARY SEEDING OPTIONS

Select one of the following species for temporary cover if:

1) The required seeds or plant stock are not available or
the normal permanent seeding period for the species has passed
   - Forage Sorghum - 1/2 bushel per acre (May 15-July 15)
   - Sorghum - Sudangrass Hybrid - 1 bushel per acre (May 15-July 15)
   - Sudangrass - 1 bushel per acre (May 15-July 15)
   - Winter Wheat - 2 bushels per acre (Aug 1-Oct 1)
   - Winter Cereal Rye - 2 bushels per acre (Aug 1-Oct 15)
   - Oats - 2 bushels per acre (Apr 1-Sept 1)
   - Annual Ryegrass - 20 Pounds per acre (Apr 1-Sept 1)

2) Triazine herbicide carryover will not allow establishment of permanent cover immediately.
   - Forage Sorghum - 1/2 Bushel per acre (May 15-July 15)
   - Sorghum - Sudangrass Hybrid - 1 Bushel per acre (May 15-July 15)
   - Sudangrass - 1 Bushel per acre (May 15-July 15)

DORMANT SEEDING

Seed is broadcast and incorporated, no-tilled, or drilled into the seedbed .
Seedbed preparations and conditions are similar to conventional seeding.

MULCHING

Mulching shall be done immediately after seedbed preparation and seeding.
Mulch shall be applied immediately after final grading for areas seeded at a later date.
Mulch material shall be relatively free of disease, pesticides, chemicals, noxious weed seeds, and other pests and pathogens.

Spread straw and hay mulch uniformly and at the rate of 1.5-2.0 tons per acre (60-70 bales). This application results in a layer of 6 to 7 stems, 1 to 2 inches thick, and provides a minimum 70% ground cover. Some soil surface can be seen after the application. Crimping (disking), wood cellulose fiber, tackifiers, netting, pinning, or other acceptable methods of anchoring will be used if needed to hold the mulch in place.

If other mulch materials are used, the rate of application shall meet the manufacturer's recommendations.

Two (2) tons/ac of 80-89 lime or equivalent from UW-EXT A3671

Lime Quality	Tons / AC.	Lime Quality	Tons / AC.
40-49	3.9	70-79	2.3
50-59	3.2	90-99	1.9
60-69	2.7	100+	1.6