Permit Fact Sheet

General Information

Permit Number:	WI-0054241-08-1 *Permit Modification
Permittee Name:	KLONDIKE CHEESE CORP
Address: City/State/Zip:	W7839 HWY 81 MONROE WI 53566
Discharge Location:	W 7839 Hwy 81, about 6 miles northwest of Monroe in Green County and groundwaters of the Jordon and Skinner Creek Watersheds in the Sugar Pecatonica River Basin.
Receiving Water:	Tributary to Skinner Creek
StreamFlow ($Q_{7,10}$):	0.14 cfs
Stream Classification:	Warm water sport fish community, non-public water supply (by default).

Facility Description

*Facility description updated with changes in operation. Changes in the description were not highlighted to improve readability.

The Klondike Cheese plant (located on Hwy 81 about 6 miles northwest of Monroe) produces Feta, Brick, Havarti, Muenster and Gouda cheeses and Greek yogurt using approximately 1.26 Mlbs/day of raw milk, 0.046 Mlbs/day powdered milk /nonfat dried milk powder and 0.0038 Mlbs/day milk protein concentrate. Cheese making typically occurs five days per week. The sanitary wastewater from the factory bathrooms is discharged to an on-site holding tank and transported to the Monroe Wastewater Treatment Facility.

The cheese whey undergoes ultrafiltration to segregate whey protein from the lactose fraction. The lactose fraction is then concentrated from approximately 8 to 27% solids by reverse osmosis (RO) before shipment off-site. Part of the residual RO permeate is re-used in-plant and the remaining percentage is currently stored in the storage lagoons prior to spray irrigation on Klondikes' sprayfields. This permit modification will allow RO permeate that cannot be reused to be discharged to Outfall 002. The whey cream and the protein / lactose byproducts are sold and processed off-site for food ingredients.

Existing clear water streams, such as non-contact cooling water and well water RO retentate of up to 0.05 MGD, are currently discharged to surface water via Outfall 002 to the unnamed tributary to Skinner Creek. This permit modification will allow the permittee to discharge process RO permeate to the Outfall 002. The tributary passes beneath Hwy 81 and then east about ½ mile to Skinner Creek. The process WW is first discharged to the pretreatment / storage system and then spray irrigated on the spray field treatment system (Outfalls 003 & 006) or discharged to the ridge and furrow (Outfall 005) for final treatment. Another ~3-4 MG/year of high strength WW composed of residual milk, whey and lactose solid is landspread (Outfall 001) on WDNR approved sites.

Treatment system improvements in 2018 included increased solids removal, additional hydraulic treatment capacity and additional spray field acres (North Spray field -Outfall 006). Improvements also included modification of the existing WW conveyance and treatment system by further segregating WW sources and providing additional stages of biological treatment (i.e. new aeration basin). Solids removal was improved with the addition of two dissolved air flotation units (DAFs). A 16 MG lagoon added cold weather wastewater storage.

Prior to discharge to the spray irrigation system, suspended solids and fat are removed from segregated wash water streams with active and passive solids separation (i.e. solids separation tanks, equalization tanks and

DAFs). Wastewater can then be aerobically and anaerobically pretreated prior to holding in aerobic storage Lagoon 3 (L3) and Lagoon 4 (L4). Following pretreatment and storage, Wastewater from Lagoon 0 (L0) is blended with that from either L3 or L4 and spray irrigated on the Plant Spray field, or North Spray field, or sent to the 5.5 acre ridge and furrow (R&F) treatment system. Flexible operation of the biological treatment system allows Klondike to direct WW from intermediate stages of treatment in order to optimize the land treatment systems (i.e Spray fields and R&F). Application to the spray fields occurs April through November. Application to the R&F occurs year-round.

Permit Modification -1 is completed upon the request of the permittee due to increased production and a change to discharge RO permeate from whey processing with Outfall 002. The modification changes Outfall 002 to include monitoring and limitations required with the change of both production levels and inclusion of RO Permeate from whey processing to the surface water outfall.

Substantial Compliance Determination

Enforcement During Last Permit: The facility has completed all previously required actions as part of the enforcement process.

After a desk top review of all discharge monitoring reports, land application reports, groundwater monitoring reports, compliance schedule items, and a site visit on May 23, 2023, this facility has been found to be in substantial compliance with their current permit.

Sample Point Designation		
Sample Point Number	**Discharge Flow, Units, and Averaging Period**	**Sample Point Location, WasteType/sample Contents and Treatment Description (as applicable)**
001		High strength dairy wastewater and lagoon sludge discharged from the 650,000-gallon storage tank to Department approved land application sites. Representative grab samples shall be collected from the port on the load out pipe.
002	17.5 MG/yr in 2017	Noncontact cooling water, reverse osmosis concentrate from well water deionization, and RO permeate from whey processing discharged to a small feeder tributary that joins a larger tributary that leads to Skinner Creek. Samples are collected under the coagulator where the inlet of the gravity discharge pipe is located within the facility between the feta plant and milk intake area. The samples for dissolved oxygen and temperature are sampled north of Hwy 81 prior to discharge from the effluent ditch to the small feeder tributary.
003	32.0 MG/yr in 2022	Treated dairy wastewater that is discharged to a 142.3-acre spray irrigation land treatment system. Samples are collected from one of the hydrants located throughout the spray irrigation site.
005	10 MG/yr in 2022	Pretreated Feta, Muenster and/or Yogurt process wastewater are discharged to a 5.5-acre ridge and furrow (R&F) land treatment system. Representative samples are collected from the DAF (dissolved air flotation) unit discharge pipe prior to discharging to the ridge and furrow treatment system or a discharge pipe at the R&F system.

Sample Point Designation		
Sample Point Number	**Discharge Flow, Units, and Averaging Period**	**Sample Point Location, WasteType/sample Contents and Treatment Description (as applicable)**
006	19 MG/yr in 2022	Treated dairy wastewater that is discharged to a 95-acre spray irrigation land treatment system. Samples are collected from one of the hydrants located throughout the spray irrigation site.
007		OUTFALL INACTIVATED. DEPARTMENT APPROVAL TO ACTIVATE OUTFALL 007 MUST BE RECEIVED PRIOR TO USE. DAF (dissolved air flotation) sludge that is discharged from three interconnected storage tanks to land application sites approved by the Department. Samples are collected at the sampling port built into pipe used for loading trucks utilized for spreading the waste. the waste.
102	Removed in permit reissuance.	Aerated lagoon wastewater

Sample Point Designation For Groundwater Monitoring Systems			
System	**Sample Pt Number**	**Well Name**	**Comments**
North Spray Field	814	MW-12 (814)	Non-point of Standards
	815	MW-13 (815)	(Background) Non-point of Standards
	816	MW-14 (816)	Non-point of Standards
	817	MW-15 (817)	Non-point of Standards
Spray Irrigation System, Plant Sprayfield	801	MW-1 (801)	Non-point of Standards
	802	MW-2 (802)	Non-point of Standards
	803	MW-3 (803)	Non-point of Standards
	804	MW-4 (804)	(Background) Non-point of Standards
Ridge & Furrow System,	805	MW5 (805)	(Background) Non-point of Standards
	806	MW-6 (806)	Non-point of Standards
	807	MW-7 (807)	Point of Standards
	808	MW-8 (808)	(Background) Non-point of Standards
	809	MW-9 (809)	Point of Standards
	810	MW-9P (810)	Non-point of Standards

Sample Point Designation For Groundwater Monitoring Systems			
System	**Sample Pt Number**	**Well Name**	**Comments**
	811	MW-10 (811)	Point of Standards
	812	MW-10P (812)	Non-point of Standards
	813	MW-11 (813)	Non-point of Standards

In Plant – Monitoring and Limitations

Changes from Previous Permit

Sample point 102 was removed from the permit.

Explanation of Limits and Monitoring Requirements

Klondike made changes in the wastewater treatment structures used at their operations since the last permit was issued. It is no longer necessary to collect the monitoring information that was previously completed at the sample point 102.

1 Surface Water - Proposed Monitoring and Limitations

Sample Point Number: 002- NCCW, RO, RO Whey Permeate to Trib

Monitoring Requirements and Limitations					
Parameter	**Limit Type**	**Limit and Units**	**Sample Frequency**	**Sample Type**	**Notes**
Flow Rate		gpd	Daily	Continuous	
BOD5, Total	Daily Max	8.2 mg/L	3/Week	Grab	May-September
BOD5, Total	Daily Max	16 mg/l	3/Week	Grab	October - April
BOD5, Total	Weekly Avg	5.0 mg/L	3/Week	Grab	May-September
BOD5, Total	Weekly Avg	10.0 mg/L	3/Week	Grab	October - April
BOD5, Total	Monthly Avg	5.0 mg/L	3/Week	Grab	May-September
BOD5, Total	Monthly Avg	10.0 mg/L	3/Week	Grab	October - April
BOD5, Total	Daily Max	76 lbs/day	3/Week	Calculated	
BOD5, Total	Monthly Avg	38 lbs/day	3/Week	Calculated	
Suspended Solids, Total	Daily Max	16 mg/L	3/Week	Grab	
Suspended Solids, Total	Weekly Avg	10 mg/L	3/Week	Grab	
Suspended Solids,	Monthly Avg	10 mg/L	3/Week	Grab	

Monitoring Requirements and Limitations					
Parameter	**Limit Type**	**Limit and Units**	**Sample Frequency**	**Sample Type**	**Notes**
Total					
Suspended Solids, Total	Daily Max	96 lbs/day	3/Week	Calculated	
Suspended Solids, Total	Monthly Avg	48 lbs/day	3/Week	Calculated	
pH Field	Daily Min	6.0 su	5/Week	Grab	
pH Field	Daily Max	9.0 su	5/Week	Grab	
Dissolved Oxygen	Daily Min	7.0 mg/L	5/Week	Grab	
Phosphorus, Total	Monthly Avg	0.66 mg/L	3/Week	Grab	Interim limit. Final limits go into effect per the phosphorus compliance schedule.
Phosphorus, Total		lbs/day	3/Week	Calculated	Monitoring only upon permit effective date. Final mass limits go into effect per the phosphorus compliance schedule.
Temperature Maximum	Weekly Average	68 deg F	Daily	Continuous	Limit effective November as an interim limit. Monitoring effective throughout the year. See Temperature Limit Schedule for final limits in April, May, October – December effective per the schedule.
Chloride		mg/L	Quarterly	Grab	
Nitrogen, Total Kjeldahl		mg/L	Quarterly	Grab	
Nitrogen, Nitrite + Nitrate Total		mg/L	Quarterly	Grab	
Nitrogen, Total		mg/L	Quarterly	Calculated	Total Nitrogen shall be calculated as the sum of reported values for Total Kjeldahl Nitrogen and Total Nitrite + Nitrate Nitrogen.
Acute WET		TUa	See Listed Qtr(s)	24-Hr Flow Prop Comp	See Whole Effluent Toxicity (WET) subsections for monitoring

Monitoring Requirements and Limitations					
Parameter	**Limit Type**	**Limit and Units**	**Sample Frequency**	**Sample Type**	**Notes**
					dates and WET requirements.
Chronic WET		TUc	See Listed Qtr(s)	24-Hr Flow Prop Comp	See Whole Effluent Toxicity (WET) subsections for monitoring dates and WET requirements.
Arsenic, Total Recoverable		µg/L	Once	Grab	
Cadmium, Total Recoverable		µg/L	Once	Grab	
Chromium, Total Recoverable		µg/L	Once	Grab	
Lead, Total Recoverable		µg/L	Once	Grab	
Nickel, Total Recoverable		µg/L	Once	Grab	
Zinc, Total Recoverable		µg/L	Once	Grab	
Nitrogen, Ammonia (NH3-N) Total		mg/L	Quarterly	Grab	Monitoring in 2027. Minimum 4 samples required.
Copper, Total Recoverable		µg/L	Quarterly	Grab	Monitoring in 2027. Minimum 4 samples required.
Hardness, Total as $CaCO_3$		mg/L	Quarterly	Grab	Monitoring in 2027. Minimum 4 samples required. Samples shall be taken on the same day as required Copper samples.

Changes from Previous Permit

Annual monitoring added for BOD5.

Water quality based effluent limits added for total phosphorus and monitoring frequency increased to weekly.

Temperature maximum limit were dropped from the permit for all months except November.

WET testing requirements were discontinued.

Modification Changes:

- **Application Sampling-** Given the timing of this modification the required sampling for permit reissuance has also been included including sampling once for arsenic, cadmium, chromium, lead,

nickel, and zinc (all as total recoverable). At least four samples each of ammonia nitrogen, copper, chloride, and hardness with a minimum of three days between each sample. In future permit terms this data would be required in the permit application and not in the permit itself.

- **Ordering-** The order of parameters has been updated based on new limits.
- **Flow-** Sample type changed to continuous as the permittee has a continuous flow meter.
- **BOD-** Water quality based effluent limits and technology based effluent limits added and sampling frequency increased.
- **TSS-** Sampling added and Water quality based effluent limits and technology based effluent limits added.
- **pH & DO-** Sample frequency increased.
- **Temperature-** Temperature weekly average limits for April, May, October, November, and December have been added with a compliance schedule to meet these limits. Sample type and frequency updated to daily and continuous.
- **Phosphorus-** Note that the final mass limits changed with the addition of the whey RO permeate.
- **Total Nitrogen Monitoring (TKN, N02+N03 and Total N)-** Annual monitoring in rotating quarters throughout the remainder of the permit term was added to the proposed permit.
- **WET-** Acute and Chronic WET testing added. Acute tests are required three times in each permit term. Chronic tests are required annually.

Explanation of Limits and Monitoring Requirements

Water Quality Based Limits and WET Requirement

Refer to the WQBEL memo for the detailed calculations, prepared by the Water Quality Bureau dated May 12, 2023 used this reissuance. Permit modification WQBEL and TBEL memo dated 10/7/2026.

Industrial Effluent Limits –In accordance with the federal regulation 40 CFR 122.45(d), limits in this permit are to be expressed as daily maximum and monthly average limits whenever practicable.

The **Monitoring Frequencies for Individual Wastewater Permit**s guidance (April 12, 2021) recommends that standard monitoring frequencies be included in individual wastewater permits based on the size and type of the facility, in order to characterize effluent quality and variability, to detect events of noncompliance, and to ensure fairness and consistency in permits issued across the state. Guidance and requirements in administrative code were considered when determining the appropriate monitoring frequencies for pollutants that have final effluent limits in effect during this permit term.

The department has determined at this time that an increase in monitoring frequency is warranted due to:

• phosphorus – the addition of phosphorus limitations effective within the term of the reissued permit

The department has determined that monitoring frequencies will remain unchanged for the following parameters although they are less than the minimum frequencies included in the guidance.

• pH (weekly) and dissolved oxygen (weekly) – both parameters show long term consistency meeting the effluent limitations at the frequencies included in the current permit.

If the permittee believes the facility should be eligible to return to the previously permitted monitoring frequency based on performance during the permitted term, they may request a reduction with their next permit application.

PFOS and PFOA

NR 106 Subchapter VIII – Permit Requirements for PFOS and PFOA Dischargers became effective on August 1, 2022. Pursuant to s. NR 106.98(3)(b), Wis. Adm. Code, the department evaluated the need for PFOS and PFOA monitoring. Based on information available at the time the proposed permit was drafted, the department has determined the permittee does not need to sample for PFOS or PFOA as part of this permit reissuance. The department may re-evaluate the need for sampling at the next permit reissuance if new information becomes available that suggests PFOS or PFOA may be present in the discharge.

Dissolved Oxygen and pH

Limits for dissolved oxygen and pH are continued from the current permit.

BOD

Monitoring is included at the annual frequency that is included in the NCCW (noncontact cooling water) general permit. Monitoring is only to provide data for the next permit reissuance.

TSS

The facility submitted TSS sample data that demonstrated that there was no potential to exceed limitations. With this demonstration there was no need to include TSS monitoring in the permit as recommended by the WQBEL memo.

Date	TSS (mg/L)
4/20/2023	< 3.4
4/21/2023	< 3.4
4/24/2023	< 3.4
4/25/2023	< 3.4

Phosphorus

Phosphorus requirements are based on the Phosphorus Rules that became effective 12/1/2010 as detailed in NR 102 Water Quality Standards and NR 217 Effluent Standards and Limitations for Phosphorus. Chapter NR 217 of the Wis. Adm. Code addresses point source dischargers of phosphorus to surface waters. NR 217 specifies WQBELs (water quality based effluent limits) for discharges of phosphorus to surface waters of the state from publicly and privately owned wastewater facilities, noncontact cooling water discharges which contain phosphorus, concentrated animal feeding operations that discharge through alternative treatment facilities and a facility/site that is regulated under NR 216 where the standards in NR151 and 216 are not sufficient to meet phosphorus criteria. WQBELs for phosphorus are needed whenever the discharge contains phosphorus at concentrations or loadings that will cause or contribute to an exceedance of the water quality standards.

For the reasons explained in the April 30, 2012 paper entitled 'Justification for Use of Monthly, Growing Season and Annual Average Periods for Expression of WPDES Permit Limits for Phosphorus Discharges in Wisconsin', WDNR has determined that it is impracticable to express the phosphorus WQBEL for the permittee as a maximum daily, weekly or monthly values. The final effluent limit for phosphorus is expressed as a six-month average. It is also expressed as a monthly average equal to three times the derived WQBEL. This final effluent limit was derived from and complies with the applicable water quality criterion. Please see the phosphorus compliance schedule included in the Schedules section. An interim limit is needed when a compliance schedule is included in the permit.

Chloride

Monitoring is included to collect sufficient data to do an evaluation of potential to exceed chloride limitations at the next permit reissuance.

Thermal

Requirements for Temperature are included in NR 102 Subchapter II Water Quality Standards for Temperature and NR 106 Subchapter V Effluent Limitations for Temperature. Thermal discharges must meet the Public Health criterion of 120 degrees F and the Fish & Aquatic Life criteria which are established to protect aquatic communities from lethal and sub-lethal thermal effects. The WQBEL Addendum memo dated May 12, 2023 determined that the only month that had a potential to exceed limitations was November, so the other temperature limits in the permit were dropped.

Whole Effluent Toxicity

Whole effluent toxicity (WET) testing requirements and limits (if applicable) are determined in accordance with ss. NR 106.08 and NR 106.09 Wis. Adm. Code, as revised August 2016. (See the current version of the Whole Effluent Toxicity Program Guidance Document and checklist and WET information, guidance and test methods at http://dnr.wi.gov/topic/wastewater/wet.html) Point totals from the WET checklist for the chronic and acute categories indicate that monitoring is not needed in the reissued permit

Modification - This permit modification adds required monitoring and limits because the permittee has changed operations to include RO permeate from whey processing. Refer to WBEL and TBEL memos dated 10/7/2026.

Sampling Frequency: The sampling frequency was set to the standard for dairy operations upon modification. This will provide adequate data to complete a permit reissuance. The department will reevaluate these frequencies upon permit reissuance.

BOD and TSS: See the WQBEL and TBEL for detailed explanation for both BOD and TSS limits. Monitoring set to minimum sampling frequency for dairy operations. The change in operations to include process wastewater in the Outfall 002 discharge requires full evaluation of BOD and TSS at this outfall. Please note that these limits were determined with the available data at the time of the modification which was prior to initiation of the change in operations. The department will reevaluate all limits and required monitoring at the reissuance following the change in operations.

Temperate: The current November limit is retained as an interim limit with a schedule for compliance for limits for April, May, October, November, and December. These limits were determined based on the information available at the time of this modification. The permittee will report temperature data daily year-round and these data will be used at the time of permit reissuance to evaluate temperature limits required with the change of operations. The permitee has indicated that they believe the temperature of the discharge at Outfall 002 is likely to be reduced with this change of operations. The permittee shall install with department approval a continuous temperature meter to ensure accurate data for determination of long term compliance options. To facilitate the Temperature Compliance Schedule the permittee shall continue to complete temperature with manual/grab sampling per the required method in the permit until a continuous meter is approved and installed. The WQBEL memo for this modification details temperature compliance options available to the permitee.

Total Nitrogen Monitoring (NO2+NO3, TKN and Total N): The Department has included effluent monitoring for Total Nitrogen in the permit through the authority under §§ 283.55(1)(e), Wis. Stats., which allows the department to require the permittee to submit information necessary to identify the type and quantity of any pollutants discharged from the point source, and through s. NR 200.065(1)(h), Wis. Adm. Code, which allows for this monitoring to be collected during the permit term. More information on the justification to include total nitrogen monitoring in wastewater permits can be found in the "Guidance for Total Nitrogen Monitoring in Wastewater Permits" dated October 1, 2019.

Permit Application Sampling: The permit modification includes sampling required for parameters that would typically be required for this type of discharge in the permit application. Due to timing of the modification and permit application, the department has included these required monitoring in this modification. Future permit

reissuances will likely not have these sampling in the reissued permit but rather have that sampling required in the permit application.

WET: The department evaluated WET testing and with the change of operations the permittee is required to complete 3 Acute WET tests per permit term and annual Chronic WET tests throughout the permit term and during expiration. To gather sufficient data during this permit modification is set up to require continued WET testing after permit expiration for Chronic WET testing. Acute WET testing is set for both years of the remainder of the permit term due to the timing of the modification and not required after permit expiration.

2 Land Treatment – Proposed Monitoring and Limitations

Sample Point Number: 003- Plant Sprayfield and 006- North Sprayfield - Spray Irrigation

Monitoring Requirements and Limitations					
Parameter	**Limit Type**	**Limit and Units**	**Sample Frequency**	**Sample Type**	**Notes**
Flow Rate		gpd	Daily	Total Daily	
Hydraulic Application Rate	Monthly Avg	2,910 gal/ac/day	Monthly	Calculated	This limit applies May through October each year.
Hydraulic Application Rate	Monthly Avg	1,455 gal/ac/day	Monthly	Calculated	This limit applies in April and November each year.
Hydraulic Application Rate	Monthly Avg	0 gal/ac/day	Monthly	Calculated	This limit applies December through March each year.
Hydraulic Loading Rate		gal/ac/yr	Annual	Total Annual	
Nitrogen, Max Applied On Any Zone	Annual Total	300 lbs/ac/yr	Annual	Total Annual	
Chloride		lbs/ac/yr	Annual	Total Annual	
BOD5, Total		mg/L	2/Month	Grab	
Chloride		mg/L	2/Month	Grab	
Nitrogen, Total Kjeldahl		mg/L	2/Month	Grab	
Nitrogen, Nitrite + Nitrate Total		mg/L	2/Month	Grab	
Phosphorus, Total		mg/L	Quarterly	Grab	

Changes from Previous Permit:

No changes from the current permit.

Explanation of Limits and Monitoring Requirements

Requirements for land treatment of industrial wastewater provided in ch. NR 214 Wis. Adm. Code and are described in the NR 140 Groundwater Evaluation, dated May 21, 2023.

The facility submitted an updated flow diagram to show that discharge from L0 can be blended with discharges from L3 or L4 at the pump stations prior to the irrigation fields. This has no impact on the format of the permit since the samples characterizing the spray irrigated wastewater are collected at the hydrants discharging to the irrigators.

Sample Point Number: 005- Ridge and Furrow

Monitoring Requirements and Limitations					
Parameter	**Limit Type**	**Limit and Units**	**Sample Frequency**	**Sample Type**	**Notes**
Flow Rate		gpd	Daily	Total Daily	
Hydraulic Application Rate	Monthly Avg	5,000 gal/ac/day	Monthly	Calculated	
BOD5, Total		mg/L	2/Month	Grab	
Chloride		mg/L	2/Month	Grab	
Nitrogen, Total Kjeldahl		mg/L	2/Month	Grab	
Nitrogen, Nitrite + Nitrate Total		mg/L	2/Month	Grab	
Phosphorus, Total		mg/L	Quarterly	Grab	
Nitrogen, Max Applied On Any Zone	Annual Total	1,900 lbs/ac/yr	Annual	Total Annual	This limit is effective for calendar year 2023.
Nitrogen, Max Applied On Any Zone	Annual Total	800 lbs/ac/yr	Annual	Total Annual	This limit effective for calendar years 2024 - 2026. Limits for following years are included in the Ridge and Furrow Loading Limitation Reduction compliance schedule.
Hydraulic Loading Rate		gal/ac/yr	Annual	Total Annual	
Chloride		lbs/ac/yr	Annual	Total Annual	

Changes from Previous Permit:

Nitrogen loading limitations lowered from 1,900 to 800 lbs/ac/yr for the first three years of the permit. After that a compliance schedule directs further loading reduction to 452 lbs/ac/yr. No other changes.

Explanation of Limits and Monitoring Requirements

Requirements for land treatment of industrial wastewater are provided in ch. NR 214 Wis. Adm. Code and are described in the NR 140 Groundwater Evaluation, dated May 31, 2023.

The groundwater evaluation claimed that the exceedances of NR 140 standards in the monitoring wells downgradient of the ridge and furrow treatment system were caused by loading to the treatment system. The groundwater evaluation proposed lower nitrogen loading limits to minimize the impact to local groundwater quality.

3 Groundwater – Proposed Monitoring and Limitations

3.1 Groundwater Monitoring System for Ridge & Furrow

Location of Monitoring system: S1/2 &NW1/4, NW 1/4, Sec. 13, T2N, R6E + NE1/4, NE1/4 Sec 14

Wells to be Monitored: MW5 (805), MW6 (806), MW7 (807), MW8 (808), MW9 (809), MW9P (810), MW10 (811), MW10P (812), MW11 (813),

Well Used To Calculate PALs: MW-5 (805), MW-8 (808)

Point of Standards Application Well(s): MW7 (807), MW9 (809), MW10 (811)

Parameter	Units	Preventative Action Limit	Enforcement Standard	Frequency
Depth To Groundwater	feet	*****	N/A	Quarterly
Groundwater Elevation	feet MSL	*****	N/A	Quarterly
Nitrogen, Nitrite + Nitrate (as N) Dissolved	mg/L	11.1	11.1	Quarterly
Nitrogen, Ammonia Dissolved	mg/L	0.97	9.7	Quarterly
Nitrogen, Organic Dissolved	mg/L	2.2	N/A	Quarterly
Chloride Dissolved	mg/L	125	250	Quarterly
pH Field	su	8.2	N/A	Quarterly
Solids, Total Dissolved	mg/L	695	N/A	Quarterly
COD, Filtered	mg/L	33	N/A	Quarterly
Iron Dissolved	mg/L	150	300	Quarterly
Manganese Dissolved	mg/L	60	300	Quarterly

Changes from Previous Permit:

The monitoring well used to calculate ACLs and indicator parameter PALs was changed from MW-11 to MW-5 and MW-8. The ACL for nitrate + nitrite nitrogen was updated from 18.5 to 11.1 mg/L. The indicator parameter PAL for COD was updated from 40 to 33 mg/L The indicator parameter PAL for total dissolved solids was updated from 670 to 695 mg/L. The indicator parameter PAL for pH was updated from 7.7-5.7 s.u. to 8.2-6.2. The PAL and Enforcement Standard limits for iron and manganese from NR 140 Wis. Adm. Code were added to the permit.

Explanation of Limits and Monitoring Requirements

The methodology and requirements for the assessment of background groundwater quality and calculation of indicator PAL and ACL can be found in Evaluating and Calculating Preventative Action Limits and Alternative Concentration Limits for Groundwater Discharges (3400-2020-10).

The results previously used from MW-11 were from samples collected prior to operation of the Ridge and Furrow system. MW-11 is located directly downgradient of the ridge and furrow system and the current results are now representative of downgradient groundwater quality and cannot represent a background well. There is some uncertainty regarding the impact from the Plant Sprayfield, MW-5 is still located in the best position to characterize the background groundwater quality for the Ridge and Furrow Treatment System. Both MW-5 and MW-8 will be used to characterize and define background groundwater quality for the Ridge and Furrow Treatment System

3.2 Groundwater Monitoring System for North Sprayfield

Location of Monitoring system: SW 1/4, Sec. 11, T2N, R6E, Jordan Township

Wells to be Monitored: MW-12 (814), MW-13 (815), MW-14 (816), MW-15 (817)

Well Used To Calculate PALs: MW-13 (815)

Point of Standards Application Well(s): None

Parameter	Units	Preventative Action Limit	Enforcement Standard	Frequency
Depth To Groundwater	feet	*****	N/A	Quarterly
Groundwater Elevation	feet MSL	*****	N/A	Quarterly
Nitrogen, Nitrite + Nitrate (as N) Dissolved	mg/L	2.0	10	Quarterly
Nitrogen, Ammonia Dissolved	mg/L	0.97	9.7	Quarterly
Nitrogen, Organic Dissolved	mg/L	2.2	N/A	Quarterly
Chloride Dissolved	mg/L	125	250	Quarterly
pH Field	su	8.2	N/A	Quarterly
Solids, Total Dissolved	mg/L	600	N/A	Quarterly
COD, Filtered	mg/L	34	N/A	Quarterly

Changes from Previous Permit:

Indicator parameter PALs were included for the North Spray Field for organic nitrogen 2.2 mg/L, pH of 6.2 to 8.2 mg/L, COD of 34 mg/L and dissolved solids of 600 mg/L.

Explanation of Limits and Monitoring Requirements

The methodology and requirements for the assessment of background groundwater quality and calculation of indicator PAL and ACL can be found in Evaluating and Calculating Preventative Action Limits and Alternative Concentration Limits for Groundwater Discharges (3400-2020-10).

3.3 Groundwater Monitoring System for Plant Sprayfield

Location of Monitoring system: N1/2 and S1/2, Section 14, T2N, R6E, Jordan Township

Wells to be Monitored: MW-1 (801), MW-2 (802), MW-3 (803), MW-4 (804)

Well Used To Calculate PALs: MW-4 (804)

Point of Standards Application Well(s): None

Parameter	Units	Preventative Action Limit	Enforcement Standard	Frequency
Depth To Groundwater	feet	*****	N/A	Quarterly
Groundwater Elevation	feet MSL	*****	N/A	Quarterly
Nitrogen, Nitrite + Nitrate (as N) Dissolved	mg/L	7.0	10	Quarterly
Nitrogen, Ammonia Dissolved	mg/L	0.97	9.7	Quarterly
Nitrogen, Organic Dissolved	mg/L	2.2	N/A	Quarterly
Chloride Dissolved	mg/L	125	250	Quarterly
pH Field	su	8.1	N/A	Quarterly
Solids, Total Dissolved	mg/L	695	N/A	Quarterly
COD, Filtered	mg/L	35	N/A	Quarterly
Iron Dissolved	ug/L	150	300	Quarterly
Manganese Dissolved	ug/L	60	300	Quarterly

Changes from Previous Permit:

The ACL for nitrate + nitrite nitrogen was updated from 8.1 to 7.0 mg/L. The indicator parameter PAL for organic dissolved nitrogen was updated from 2.3 to 2.2 mg/L. The indicator parameter PAL for COD was updated from 49 to 35 mg/L. The indicator parameter PAL for total dissolved solids was updated from 720 to 695 mg/L. The indicator parameter PAL for pH was updated from 7.7-5.7 s.u. to 8.1-6.1. The PAL and Enforcement Standard limits for iron and manganese from NR 140 Wis. Adm. Code were added to the permit.

Explanation of Limits and Monitoring Requirements

The methodology and requirements for the assessment of background groundwater quality and calculation of indicator PAL and ACL can be found in Evaluating and Calculating Preventative Action Limits and Alternative Concentration Limits for Groundwater Discharges (3400-2020-10).

4 Land Application – Liquid Industrial Wastewater & Sludge

Sample Point Number: 001- High Strength Wastewater

Monitoring Requirements and Limitations					
Parameter	**Limit Type**	**Limit and Units**	**Sample Frequency**	**Sample Type**	**Notes**
Flow Rate		gal/month	Monthly	Total Monthly	
Chloride		mg/L	Monthly	Grab	
Nitrogen, Ammonia (NH3-N) Total		mg/L	Monthly	Grab	
Nitrogen, Total Kjeldahl		mg/L	Monthly	Grab	
Phosphorus, Total		mg/L	Quarterly	Grab	
Solids, Total		Percent	Quarterly	Grab	
Phosphorus, Water Extractable		% of Tot P	Annual	Grab	
Potassium, Total Recoverable		mg/L	Annual	Grab	
pH Field		su	Annual	Grab	

Changes from Previous Permit:

Monitoring requirements were added for ammonia, total solids, water extractable phosphorus, potassium and field pH.

Explanation of Limits and Monitoring Requirements

Requirements for land application of industrial sludge are determined in accordance with ch. NR 214 Wis. Adm. Code. The additional parameters were included to better characterize the material for determining land spreading contributions for the nutrient management plan.

Water extractable phosphorus (WEP) is the coefficient for determining plant available phosphorus from measured total phosphorus. In Wisconsin, the Penn State Method is utilized and is expressed in percent. While a total P may be significant, the WEP may show that only a small percentage of the P is available to plants because of factors such as treatment processes and chemical addition that "tie-up" phosphorus limiting the amount of phosphorus that is plant available. As part of the Wisconsin's nutrient management plan (NMP) requirements, the accounting of all fertilizers must be included over the NMP cycle. The fertilizer value of the waste needs to be communicated to the farmer and accounted for in the NMP.

Sample Point Number: 007- DAF Unit Sludges

Monitoring Requirements and Limitations					
Parameter	**Limit Type**	**Limit and Units**	**Sample Frequency**	**Sample Type**	**Notes**
Flow Rate		gpd	Monthly	Grab	

Monitoring Requirements and Limitations					
Parameter	**Limit Type**	**Limit and Units**	**Sample Frequency**	**Sample Type**	**Notes**
Solids, Total		Percent	Monthly	Grab	
Chloride		Percent	Monthly	Grab	
Nitrogen, Total Kjeldahl		Percent	Monthly	Grab	
pH Field		su	Annual	Grab	
Phosphorus, Total		Percent	Quarterly	Grab	
Phosphorus, Water Extractable		% of Tot P	Annual	Grab	
Potassium, Total Recoverable		Percent	Annual	Grab	
Nitrogen, Ammonium (NH4-N) Total		Percent	Annual	Grab	
PFOA + PFOS		µg/kg	Annual	Calculated	Report the sum of PFOA and PFOS. See PFAS Permit Sections for more information.
PFAS Dry Wt			Annual	Grab	Perfluoroalkyl and Polyfluoroalkyl Substances based on updated DNR PFAS List. See PFAS Permit Sections for more information.

Changes from Previous Permit:

Outfall 007 was added to the permit to allow for the land application of DAF sludges.

PFAS – Monitoring is required annually pursuant to s. NR 214.18(5)(b), Wis. Adm. Code.

Explanation of Limits and Monitoring Requirements

In order to accommodate the sludge effluent from the DAF units, Klondike is requesting the addition of a landspreading outfall for DAF sludges. Representative grab samples will be collected from the sludge tanks (Tanks A & B) or from transport vehicles prior to application to Department approved sites by a contract hauler/applicator.

Requirements for land application of industrial sludge are provided in ch. NR 214 Wis. Adm. Code. This outfall will be inactive when the permit is reissued. The permittee will need to request that the outfall be activated prior to use.

Water extractable phosphorus (WEP) is the coefficient for determining plant available phosphorus from measured total phosphorus. In Wisconsin, the Penn State Method is utilized and is expressed in percent. While a total P may be significant, the WEP may show that only a small percentage of the P is available to plants

because of factors such as treatment processes and chemical addition that "tie-up" phosphorus limiting the amount of phosphorus that is plant available. As part of the Wisconsin's nutrient management plan (NMP) requirements, the accounting of all fertilizers must be included over the NMP cycle. The fertilizer value of the waste needs to be communicated to the farmer and accounted for in the NMP.

PFAS- The presence and fate of PFAS in municipal and industrial sludges is an emerging public health concern. EPA has developed a draft risk assessment to determine future land application rates and released this risk assessment in January of 2025. The department is evaluating this new information. Until a decision is made, the "Interim Strategy for Land Application of Biosolids and Industrial Sludges Containing PFAS" should be followed

Collecting sludge data on PFAS concentrations from a wide range of wastewater treatment facilities will help protect public health from exposure to elevated levels of PFAS and determine the department's implementation of EPA's recommendations. To quantitate this risk, PFAS sampling has been included in this WPDES permit pursuant to ss. NR 214.18(5)(b) and NR 204.06(2)(b)9., Wis. Adm. Code.

5 Schedules

5.1 Land Application Management Plan

A management plan is required for the land application system.

Required Action	Due Date
Land Application Management Plan: Submit an update to the management plan to optimize the land application system performance and demonstrate compliance with Wisconsin Administrative Code NR 214.	03/31/2024

5.2 Land Treatment Management Plan

A management plan is required for the land treatment system.

Required Action	Due Date
Land Treatment Management Plan: Submit an update to the management plan to optimize the land treatment system performance and demonstrate compliance with Wisconsin Administrative Code NR 214.	06/30/2024

5.3 Land Treatment Annual Report

Required Action	Due Date
Submit Annual Land Treatment Report #1: Submit the Annual Land Treatment Report by January 31st for the previous calendar year.	03/31/2024
Submit Annual Land Treatment Report #2: Submit the Annual Land Treatment Report by January 31st for the previous calendar year.	03/31/2025
Submit Annual Land Treatment Report #3: Submit the Annual Land Treatment Report by January 31st for the previous calendar year.	03/31/2026
Submit Annual Land Treatment Report #4: Submit the Annual Land Treatment Report by January	03/31/2027

31st for the previous calendar year.	
Submit Annual Land Treatment Report #5: Submit the Annual Land Treatment Report by January 31st for the previous calendar year.	03/31/2028

5.4 Water Quality Based Effluent Limits (WQBELs) for Total Phosphorus

The permittee shall comply with the WQBELs for Phosphorus as specified. No later than 14 days following each compliance date, the permittee shall notify the Department in writing of its compliance or noncompliance. If a submittal is required, a timely submittal fulfills the notification requirement.

Required Action	Due Date
Operational Evaluation Report: The permittee shall prepare and submit to the Department for approval an operational evaluation report. The report shall include an evaluation of collected effluent data, possible source reduction measures, operational improvements or other minor facility modifications that will optimize reductions in phosphorus discharges from the treatment plant during the period prior to complying with final phosphorus WQBELs and, where possible, enable compliance with final phosphorus WQBELs by 9/30/2031. The report shall provide a plan and schedule for implementation of the measures, improvements, and modifications as soon as possible, but not later than 6/30/2027 and state whether the measures, improvements, and modifications will enable compliance with final phosphorus WQBELs. Regardless of whether they are expected to result in compliance, the permittee shall implement the measures, improvements, and modifications in accordance with the plan and schedule specified in the operational evaluation report. If the operational evaluation report concludes that the facility can achieve final phosphorus WQBELs using the existing treatment system with only source reduction measures, operational improvements, and minor facility modifications, the permittee shall comply with the final phosphorus WQBEL by 9/30/2026 and is not required to comply with the milestones identified below for years 3 through 9 of this compliance schedule ('Preliminary Compliance Alternatives Plan', 'Final Compliance Alternatives Plan', 'Final Plans and Specifications', 'Treatment Plant Upgrade to Meet WQBELs', 'Complete Construction', 'Achieve Compliance'). STUDY OF FEASIBLE ALTERNATIVES - If the Operational Evaluation Report concludes that the permittee cannot achieve final phosphorus WQBELs with source reduction measures, operational improvements and other minor facility modifications, the permittee shall initiate a study of feasible alternatives for meeting final phosphorus WQBELs and comply with the remaining required actions of this schedule of compliance. If the Department disagrees with the conclusion of the report, and determines that the permittee can achieve final phosphorus WQBELs using the existing treatment system with only source reduction measures, operational improvements, and minor facility modifications, the Department may reopen and modify the permit to include an implementation schedule for achieving the final phosphorus WQBELs sooner than 9/30/2031.	06/30/2024
Compliance Alternatives, Source Reduction, Improvements and Modifications Status: The permittee shall submit a 'Compliance Alternatives, Source Reduction, Operational Improvements and Minor Facility Modification' status report to the Department. The report shall provide an update on the permittee's: (1) progress implementing source reduction measures, operational improvements, and minor facility modifications to optimize reductions in phosphorus discharges and, to the extent that such measures, improvements, and modifications will not enable compliance with the WQBELs, (2) status evaluating feasible alternatives for meeting phosphorus WQBELs.	06/30/2025
Preliminary Compliance Alternatives Plan: The permittee shall submit a preliminary compliance alternatives plan to the Department. If the plan concludes upgrading of the permittee’s wastewater treatment facility is necessary to	06/30/2026

achieve final phosphorus WQBELs, the submittal shall include a preliminary engineering design report. If the plan concludes Adaptive Management will be used, the submittal shall include a completed Watershed Adaptive Management Request Form 3200-139 without the Adaptive Management Plan. If water quality trading will be undertaken, the plan must state that trading will be pursued.	
Final Compliance Alternatives Plan: The permittee shall submit a final compliance alternatives plan to the Department. If the plan concludes upgrading of the permittee's wastewater treatment is necessary to meet final phosphorus WQBELs, the submittal shall include a final engineering design report addressing the treatment plant upgrades, and a facility plan if required pursuant to ch. NR 110, Wis. Adm. Code. If the plan concludes Adaptive Management will be implemented, the submittal shall include a completed Watershed Adaptive Management Request Form 3200-139 and an engineering report addressing any treatment system upgrades necessary to meet interim limits pursuant to s. NR 217.18, Wis. Adm. Code. If the plan concludes water quality trading will be used, the submittal shall identify potential trading partners. Note: See 'Alternative Approaches to Phosphorus WQBEL Compliance' in the Surface Water section of this permit.	06/30/2027
Progress Report on Plans & Specifications: Submit progress report regarding the progress of preparing final plans and specifications. Note: See 'Alternative Approaches to Phosphorus WQBEL Compliance' in the Surface Water section of this permit.	06/30/2028
Final Plans and Specifications: Unless the permit has been modified, revoked and reissued, or reissued to include Adaptive Management or Water Quality Trading measures or to include a revised schedule based on factors in s. NR 217.17, Wis. Adm. Code, the permittee shall submit final construction plans to the Department for approval pursuant to s. 281.41, Stats., specifying treatment plant upgrades that must be constructed to achieve compliance with final phosphorus WQBELs, and a schedule for completing construction of the upgrades by the complete construction date specified below. (Note: Permit modification, revocation and reissuance, and reissuance are subject to s. 283.53(2), Stats.) Note: See 'Alternative Approaches to Phosphorus WQBEL Compliance' in the Surface Water section of this permit.	06/30/2029
Treatment Plant Upgrade to Meet WQBELs: The permittee shall initiate construction of the upgrades. The permittee shall obtain approval of the final construction plans and schedule from the Department pursuant to s. 281.41. Stats. Upon approval of the final construction plans and schedule by the Department pursuant to s. 281.41, Stats., the permittee shall construct the treatment plant upgrades in accordance with the approved plans and specifications. Note: See 'Alternative Approaches to Phosphorus WQBEL Compliance' in the Surface Water section of this permit.	11/01/2029
Construction Upgrade Progress Report: The permittee shall submit a progress report on construction upgrades. Note: See 'Alternative Approaches to Phosphorus WQBEL Compliance' in the Surface Water section of this permit.	11/01/2030
Complete Construction: The permittee shall complete construction of wastewater treatment system upgrades. Note: See 'Alternative Approaches to Phosphorus WQBEL Compliance' in the Surface Water section of this permit.	06/30/2031

Achieve Compliance: The permittee shall achieve compliance with final phosphorus WQBELs. Note: See 'Alternative Approaches to Phosphorus WQBEL Compliance' in the Surface Water section of this permit.	09/30/2031

5.5 Ridge and Furrow Loading Limitation Reduction

Required Action	Due Date
Operational Evaluation Report: The permittee shall submit to the Department for approval an operational evaluation report for the ridge and furrow system that assesses possible source reduction measures, operational improvements or other minor facility modifications that will result in compliance with the 452 lbs/ac/yr limit beginning in 2027. Also, include any additional preliminary compliance alternatives beyond the components of the operational evaluation report.	10/01/2024
Progress Report #1: Submit a progress report regarding the reduction in nitrogen loading to a value of 452 lbs/ac/yr for calendar year 2027.	03/31/2025
Alternative Exemption Actions: If the permittee believes an exemption request may be necessary beginning in the fourth year of the permit, the permittee shall install a monitoring well at or beyond the DMZ between MW-11 and MW-7 no later than December 31, 2025. A total of eight rounds of quarterly sampling results from this monitoring well will be required for the determination of providing an exemption.	12/31/2025
Progress Report #2: Submit a progress report regarding the reduction in nitrogen loading to a value of 452 lbs/ac/yr for calendar year 2027.	03/31/2026
Progress Report #3: Submit a progress report regarding the reduction in nitrogen loading to a value of 452 lbs/ac/yr for calendar year 2027.	03/31/2027
Achieve Compliance: Complete operational actions that result in the reduction in nitrogen loading to a value of 452 lbs/ac/yr for calendar year 2027 or submit an exemption request for loading the ridge and furrow to a value above 452 lbs/ac/yr.	01/31/2028

Explanation of Schedules

Land Application Management Plan

Update management plan to include current operations especially any changes since the permit reissuance.

Land Treatment Management Plan

Update management plan to include current operations especially any changes since the permit reissuance.

Land Treatment Annual Report

This schedule was added to the permit to create electronically trackable events.

Water Quality Based Effluent Limits (WQBELs) for Total Phosphorus

Limits were added for total phosphorus. This compliance schedule is to allow time for a permittee to come into compliance with final WQBEL limits.

Ridge and Furrow Loading Limitation Reduction

The groundwater evaluation claimed that the exceedances of NR 140 standards in the monitoring wells downgradient of the ridge and furrow treatment system were caused by loading to the treatment system. The groundwater evaluation proposed lower nitrogen loading limits to minimize the impact to local groundwater quality.

5.6 Temperature Limits and Dissipative Cooling Evaluation

This compliance schedule requires the permittee to achieve compliance by the specified date.

Required Action	Due Date
Report on Effluent Discharges: Submit a report on effluent temperature with conclusions regarding compliance. Informational Note: Refer to the Surface Water subsections regarding 'Determination of Need for Effluent Limits' and 'Dissipative Cooling Demonstration - Weekly Average Limits' concerning requests for a Department determination on the need for limits and follow-up procedures for demonstration of dissipative cooling per NR 106.59, as well as re-evaluation of the limits pursuant to NR 106 Subchapters V & VI or NR 102.26, Wis. Adm. Code.	01/01/2028
Action Plan: Submit an action plan for complying with all effluent temperature limits that remain following the Department's review for necessity.	03/01/2028
Construction Plans: Submit construction plans (if construction is required for complying with effluent temperature limits) and include plans and specifications with the submittal.	03/01/2028
Complete Actions: Complete actions necessary to achieve compliance with effluent temperature limits.	09/30/2028

Explanation of Schedules

This schedule is added with the permit modification to provide time to comply with permit limits for April, May and October – December listed in the permit and the WQBEL memo dated for the modification. The dates of this schedule are reflective of the expiration date of this permit. In accordance with s. NR 106.117(3)(e), Wis. Adm. Code the permit modification may include a schedule that extends beyond the expiration date. However, the permitee indicated that they believe the change in operations will lower effluent temperature and therefore compliance will be possible. Section NR106.117(3)(a), Wis. Adm. Code requires a schedule require compliance as soon as possible. Therefore, this schedule requires compliance with the temperature limits at the end of the permit term

Other Comments:

None

Attachments:

Water Quality Based Effluent Limits memo dated January 2, 2020; Addendum to the WQBEL by Sarah Luck dated May 12, 2023

Ch NR 140 Groundwater Evaluation Report by Zach Watson dated May 31, 2023.

Water Quality Based Effluent Limits memo dated 10/7/2026; revised 11/6/2026

Technology Based Effluent Limits dated 10/7/2026

Proposed Expiration Date:

9/30/2028

Prepared By:

Brenda Howald **Wastewater Specialist**

Date: 7/13/2023

cc:

Modification Prepared By: Jennifer Jerich, Wastewater Specialist

Date: 11/11/2026

CORRESPONDENCE/MEMORANDUM

State of Wisconsin

DATE: October 7, 2026; revised November 6, 2026 to change 10% AC thermal limits

TO: Jennifer Jerich – SCR

FROM: Sarah Luck – SCR

SUBJECT: Water Quality-Based Effluent Limitations Addendum for Klondike Cheese Corporation WPDES Permit No. WI-0054241-08-1

This is in response to your request for an evaluation of the need for water quality-based effluent limitations (WQBELs) using chapters NR 102, 104, 105, 106, 207, 210, 212, and 217 of the Wisconsin Administrative Code (where applicable) for the discharge from the Klondike Cheese Corporation in Green County. This industrial facility discharges to the Unnamed Tributary of Skinner Creek, located in the Jordan and Skinner Creek Watersheds in the Sugar Pecatonica River Basin.

This is an addendum to the previous WQBEL memos (January 2, 2020 and July 23, 2019) to account for a planned increased discharge from an additional waste stream due to production growth at the facility. The evaluation of the permit recommendations is discussed in more detail in the attached report.

Based on our review, the following recommendations are made on a chemical-specific basis at Outfall 002:

Parameter	Daily Maximum	Daily Minimum	Weekly Average	Monthly Average	Six-Month Average	Footnotes
Flow Rate						1
BOD_5 May – September October – April	 **8.2 mg/L** 76 lbs/day **16 mg/L** 76 lbs/day		 5.0 mg/L 10 mg/L	 **5.0 mg/L** 38 lbs/day **10 mg/L** 38 lbs/day		2,3
TSS Concentration TBEL	 **16 mg/L** 96 lbs/day		 10 mg/L	 **10 mg/L** 48 lbs/day		2,3
pH	9.0 s.u.	6.0 s.u.				4
Dissolved Oxygen		7.0 mg/L				4
Phosphorus Interim Limit Final WQBELs				 0.66 mg/L 0.225 mg/L	 0.075 mg/L 0.061 lbs/day	5
Temperature Interim November Final April May October November December			 68°F 56°F 66°F 59°F 46°F 47°F			6
Ar, Cd, Cr, Cl, Cu, Pb, Ni, Zi, Ammonia						7

Printed on Recycled Paper

Parameter	Daily Maximum	Daily Minimum	Weekly Average	Monthly Average	Six-Month Average	Footnotes
Nitrogen, and Hardness						
TKN, Nitrate+Nitrite, and Total Nitrogen						8
Acute WET						9,11
Chronic WET						10,11

Footnotes:

1. Monitoring only.
2. The mass limits are categorical limits based on ch. NR 240, Wis. Adm. Code. These limits are addressed in a separate memo and are based on expected production rates.
3. Additional limits to comply with the expression of limits requirements in ss. NR 106.07 and NR 205.065(7), Wis. Adm. Codes, are denoted in bold.
4. No changes from the current permit.
5. A compliance schedule is in the current permit to meet the final WQBELs by September 30, 2031.
6. The current permit contains a weekly average limit of 68°F in November. If a compliance schedule is included in the permit, the current limit of 68°F in November will act as an interim limit until the final limits go into effect. A compliance schedule may be included in the permit so that representative thermal effluent data can be collected with the addition of the new waste stream. The facility may also apply for antidegradation review in order to receive up to full assimilative capacity thermal limits and/or a reduction in limits if there is no longer reasonable potential using representative thermal data. In addition to the limits, year-round thermal monitoring is recommended.
7. One sample each of arsenic, cadmium, chromium, lead, nickel, and zinc (all as total recoverable). At least four samples each of ammonia nitrogen, copper, chloride, and hardness with a minimum of three days between each sample. This data will be used to evaluate the need for water quality-based effluent limits at the next permit reissuance and can be used for the permit application in accordance with Table 1 of s. NR 200.065, Wis. Adm. Code.
8. The *Guidance for Total Nitrogen Monitoring in Wastewater Permits* (October 1, 2019) recommends quarterly total nitrogen monitoring for Class A cheese facilities (as defined in ch. NR 240, Wis. Adm. Code). Sections 283.37(5) and 283.55(1)(e), Wis. Stats, and ss. NR 200.065(1)(g) and NR 200.065(1)(h), Wis. Adm. Code, provide the authority to request this monitoring during the permit term. Total Nitrogen is the sum of nitrate (NO_3), nitrite (NO_2), and total Kjeldahl nitrogen (TKN) (all expressed as N).
9. Three acute WET tests are required. According to the *State of Wisconsin Aquatic Life Toxicity Testing Methods Manual* (s. NR 219.04, Table A, Wis. Adm. Code), a synthetic (standard) laboratory water may be used as the dilution water and primary control in acute WET tests.
10. Annual chronic WET testing is required. The Instream Waste Concentration (IWC) to assess chronic test results is 52%. According to the *State of Wisconsin Aquatic Life Toxicity Testing Methods Manual* (s. NR 219.04, Table A, Wis. Adm. Code), chronic testing shall be performed using a dilution series of 100%, 75%, 50%, 25% & 12.5%. The primary control water used in chronic WET tests conducted on Outfall 002 shall be a grab sample collected from the Unnamed Tributary of Skinner Creek, upstream of the discharge.
11. Sampling WET concurrently with any chemical-specific toxic substances is recommended. Tests should be done in rotating quarters to collect seasonal information about this discharge. Chronic WET testing should continue after the permit expiration date (until the permit is reissued).

Please consult the attached report for details regarding the above recommendations. If there are any questions or comments, please contact Sarah Luck (Sarah.Luck@wisconsin.gov) or Diane Figiel (Diane.Figiel@wisconsin.gov).

Attachments (3) – Narrative, Site Map, and Thermal Table

PREPARED BY: Sarah Luck Date: November 6, 2026

Sarah Luck
Water Resources Engineer

E-cc: Zach Watson, Hydrogeologist – SCR
Lisa Creegan, Regional Wastewater Supervisor – SCR
Diane Figiel, Water Resources Engineer – WY
AJ Jeninga-Nehls, Wastewater Specialist – WY/3

Attachment #1

Water Quality-Based Effluent Limitations for
Klondike Cheese Corporation

WPDES Permit No. WI-0054241-08-1

PART 1 – BACKGROUND INFORMATION

Facility Description

Klondike Cheese Corporation produces cheese (feta, muenster, brick, and Havarti) and yogurt from cow's milk. Pretreated process wastewaters are discharged to a ridge and furrow land treatment system and also to spray irrigation systems, high strength dairy wash waters are landspread, and non-contact cooling water and low-strength reverse osmosis (RO) concentrate are directed to an Unnamed Tributary of Skinner Creek via Outfall 002.

The facility reached out to the Department via email on July 15, 2026 requesting a permit modification for the addition of polished concentrate of whey (COW) water to the surface water discharge. This change would increase the total discharge to surface water to approximately 0.097 MGD as a five-day production average (per the facility's 9/25/2026 flow diagram). Klondike is expecting significant growth over the next several years with an expected total surface water discharge rate of 0.12 MGD as a five-day production average by 2030 (per the June 2026 correspondence).

There are several other outfalls at this facility that are not addressed in this memo since they do not discharge to surface water.

Attachment #2 is a map of the area showing the approximate location of Outfall 002.

Existing Permit Limitations

The current permit, expiring on September 30, 2028, includes the following effluent limitations and monitoring requirements.

Parameter	Daily Maximum	Daily Minimum	Weekly Average	Monthly Average	Six-Month Average	Footnotes
Flow Rate						1
BOD_5						1
pH	9.0 s.u.	6.0 s.u.				-
Dissolved Oxygen		7.0 mg/L				-
Phosphorus Interim Final WQBELs				0.66 mg/L 0.225 mg/L	0.075 mg/L 0.030 lbs/day	2
Temperature November			68°F			-
Chloride						1

Footnotes:

1. Monitoring only.
2. A compliance schedule is in the current permit to meet the final WQBELs by September 30, 2031.

Receiving Water Information

- Name: Unnamed Tributary of Skinner Creek
- Waterbody Identification Code (WBIC): 896200
- Classification used in accordance with chs. NR 102 and 104, Wis. Adm. Code: Default Warm Water Sport Fish (WWSF) community, non-public water supply and recreational use.
- Low Flow: The following 7-Q_{10} and 7-Q_2 values where Outfall 002 is located were estimated by Rob Washbusch from USGS and are in the memo dated November 30, 2004.
  7-Q_{10} = 0.14 cfs (cubic feet per second)
  7-Q_2 = 0.20 cfs

	Jan	Feb	Mar	Apr	May	Jun	Jul	Aug	Sep	Oct	Nov	Dec
7-Q_{10} (cfs)	0.15	0.17	0.21	0.23	0.20	0.19	0.17	0.16	0.17	0.18	0.18	0.16
7-Q_2 (cfs)	0.24	0.25	0.33	0.38	0.33	0.31	0.28	0.26	0.26	0.27	0.28	0.25

- % of low flow used to calculate limits: 100%
- Multiple dischargers: None.
- Impaired water status: The Unnamed Tributary of Skinner Creek is not currently listed as impaired. Approximately 0.50 miles downstream, Skinner Creek is listed as impaired for total phosphorus (4/1/2012).

Effluent Information

- Flow rate:
  Maximum annual average = 0.097 million gallons per day (MGD)
  Since the new process wastewater stream has not yet been added to the discharge, using the maximum annual average of current flow data is not representative of what conditions will soon be. Therefore, the facility's estimate of 0.097 MGD (even though it is a five-day production average) is used as an approximation. For reference, the actual maximum annual average flow from February 2023 through June 2026 was 0.036 MGD (excluding zero-flow days).
- Acute dilution factor used in accordance with s. NR 106.06(3)(c), Wis. Adm. Code: Not applicable – this facility does not have an approved Zone of Initial Dilution (ZID).
- Wastewater source: Concentrate of whey (COW) water (new source), non-contact cooling water, and low-strength reverse osmosis (RO) concentrate
- Water supply: Private wells.
- Additives: Klondike Cheese Corporation confirmed via email on 09/15/2026 that no additives are used.

PART 2 – WATER QUALITY-BASED EFFLUENT LIMITATIONS FOR CONVENTIONAL POLLUTANTS

BOD_5

Concentration Limits

Biological oxygen demand (BOD_5) concentration limits of 10 mg/L as a weekly average from May

through September and 15 mg/L as weekly average from October through April were included in the permit that was issued on February 1, 2005 (-06 issuance). However, these limits were removed, as cited in the WQBEL memo dated August 8, 2013, because "Noncontact cooling water discharges usually are not expected to contain BOD_5." Due to the proposed addition of a process waste stream, **it is recommended that BOD_5 concentration limits be reinstated in the permit.**

There are no numerical water quality criteria for BOD_5. In establishing BOD_5 limitations, the primary intent is to prevent a lowering of dissolved oxygen levels in the receiving water below water quality standards as specified in ss. NR 102.04(4)(a) and (b), Wis. Adm. Code. The 26-lb method is the most frequently used approach for calculating BOD_5 limits when resources are not available to develop a detailed water quality model. This simplified model was developed in the 1970s by the Wisconsin Committee on Water Pollution on the Fox, Wisconsin, Oconto, and Flambeau Rivers. Further studies throughout the 1970s proved this model to be relatively accurate. The model has since then been used by the Department on many occasions when resources are not available to perform a site-specific model.

Antidegradation

Although this is an existing discharge, since the flow rates are increasing and since there is new process wastewater being discharged to surface water, these changes constitute an "increased discharge" as defined in ch. NR 207, Wis. Adm Code. Per ch. NR 207, Wis. Adm. Code, significant lowering of water quality (SLOWQ) occurs if the effluent will cause the instream concentrations of the applicable parameter(s) to increase above $1/10^{th}$ of the available assimilative capacity of the receiving water for high quality waters. If the recalculated limits based on an increased design flow will cause SLOWQ in the receiving water Klondike Cheese Corporation would need to submit a social importance analysis or economic importance analysis (defined in NR 207.031(8)(b), Wis. Adm. Code) and an alternatives analysis (defined in NR 207.031(8)(c), Wis. Adm. Code).

10% of Assimilative Capacity

Modifying the 26-lb method equation to account for 10% of the assimilative capacity yields the following equation:

$$\text{10\% AC } Limit(mg/L) = 2.4\left(DO_{mixed} - (0.9DO_s + 0.1DO_{std})\right)\frac{Q_s+(1-f)Q_e}{Q_e}\left(0.967^{(T-24)}\right)$$

Where:

DO_{mixed} = DO concentration of stream and the effluent, mixed
DO_{Std} = Water quality criterion for dissolved oxygen
Q_s = Seven-day 10-year low flow for the receiving water in cfs
Q_e = Effluent flow in cfs
T = Stream temperature in degrees C

The equation for calculating the dissolved oxygen in the stream, which is a combination of the stream DO and effluent DO, is:

$$DO_{Mixed} = \frac{DO_s(Q_s - fQ_e) + DO_eQ_e}{Q_s + (1-f)Q_e}$$

Where:

DO_S = DO concentration of stream upstream of the discharge
DO_e = DO concentration of effluent

Q_s = Seven-day 10-year low flow for the receiving water in cfs
Q_e = Effluent flow in cfs
f = withdrawal factor

The calculated weekly average BOD_5 limits are shown the table below.

10% of Assimilative Capacity BOD_5 Effluent Limitations

		May - Oct	Nov - Apr
Background Information	Q_e = 0.097 MGD = 0.150 cfs	0.15	0.15
	7-Q_{10} (cfs)	0.14	0.14
	River Temperature (°C)	16	3.3
Dissolved Oxygen (mg/L)	Effluent	7.0	7.0
	Background	7.0	7.0
	Criteria for WWFF	5.0	5.0
Weekly Ave BOD Effluent Limitations - 10% of Assim. Capacity	Concentration Limits (mg/L)	1.2	1.8

The above limits are the 10% assimilative capacity limits assuming the current daily minimum dissolved oxygen (DO) limit of 7.0 mg/L. The calculated limits are below what minimums typically given to facilities. For discharge situations with no or little dilution, minimum **BOD_5 limits of 5.0 mg/L for May – October and 10 mg/L for November – April are recommended**. These minimum limits can be given without an antidegradation review from ch. NR 207, Wis. Adm. Code, since the minimums are not considered significant lowering of water quality.

Expression of Limits
The methods for calculating limitations for industrial discharges to conform to 40 CFR 122.45(d) are specified in s. NR 106.07(4), Wis. Adm. Code, as follows:

Whenever a weekly average limitation is determined necessary to protect water quality:

- **A monthly average limitation shall also be included in the permit and set equal to the weekly average limit** unless a more restrictive limit is already determined necessary to protect water quality.
- A daily maximum limitation shall also be included in the permit and set equal to the daily maximum WQBEL calculated under s. NR 106.06, Wis. Adm. Code, or a daily maximum limitation calculated using the following procedure, whichever is more restrictive:

Daily Maximum Limitation= WQBELc × DMF

Where:

DMF = Daily Multiplication Factor as defined in Table 2
CV = coefficient of variation (CV) as calculated in s. NR 106.07(5m), Wis. Adm. Code.
= 0.6 since fewer than 10 data points

May – September Daily Maximum Limitation = WQBELc × DMF = 5.0 × 1.639 = **8.2 mg/L**

October through April Daily Maximum Limitation = WQBELc × DMF = 10 × 1.639 = **16 mg/L**

s. NR 106.07 (4) (e). Table 2 — Daily Multiplication Factor

CV	0.1	0.2	0.3	0.4	0.5	**0.6**	0.7	0.8	0.9	1.0
DMF	1.114	1.235	1.359	1.460	1.557	**1.639**	1.712	1.764	1.802	1.828

CV	1.1	1.2	1.3	1.4	1.5	1.6	1.7	1.8	1.9	2.0
DMF	1.842	1.849	1.851	1.843	1.830	1.815	1.801	1.781	1.751	1.744

Mass Limits

Chapter NR 240, Wis. Adm. Code, specifies effluent guidelines that are applicable to pollutants or pollutant properties in discharges of process wastewater resulting from the production of dairy products. These limits are addressed outside of this memo and are based on production information provided by the facility.

TSS

Concentration Limits

Total suspended solids (TSS) are typically expressed as numeric limits in permits but are meant to ensure that substances will not cause objectionable deposits or floating material, as required under s. NR 102.04, Wis. Adm. Code. Generally, TSS limits are set equal to the calculated BOD_5 limits, and the numeric BOD_5 limit calculations are a surrogate for the TSS narrative criteria. Typically, the minimum TSS limit that is given is 10 mg/L when there is little to no available dilution and the minimum BOD_5 limits are also given. Any limit equal to or less than this will not be considered significant lowering of water quality. Therefore, **a TSS concentration limit of 10 mg/L as a weekly average year-round is recommended.**

Expression of Limits

The methods for calculating limitations for industrial discharges to conform to 40 CFR 122.45(d) are specified in s. NR 106.07(4), Wis. Adm. Code, as follows:

Whenever a weekly average limitation is determined necessary to protect water quality:

- **A monthly average limitation shall also be included in the permit and set equal to the weekly average limit** unless a more restrictive limit is already determined necessary to protect water quality.
- A daily maximum limitation shall also be included in the permit and set equal to the daily maximum WQBEL calculated under s. NR 106.06, Wis. Adm. Code, or a daily maximum limitation calculated using the following procedure, whichever is more restrictive:

Daily Maximum Limitation= WQBELc × DMF

Where:

DMF = Daily Multiplication Factor as defined in Table 2

CV = coefficient of variation (CV) as calculated in s. NR 106.07(5m), Wis. Adm. Code.
= 0.6 since fewer than 10 data points

Daily Maximum Limitation = WQBELc × DMF = 10 × 1.639 = **16 mg/L**

s. NR 106.07 (4) (e). Table 2 — Daily Multiplication Factor

CV	0.1	0.2	0.3	0.4	0.5	**0.6**	0.7	0.8	0.9	1.0
DMF	1.114	1.235	1.359	1.460	1.557	**1.639**	1.712	1.764	1.802	1.828

CV	1.1	1.2	1.3	1.4	1.5	1.6	1.7	1.8	1.9	2.0
DMF	1.842	1.849	1.851	1.843	1.830	1.815	1.801	1.781	1.751	1.744

Mass Limits
Chapter NR 240, Wis. Adm. Code, specifies effluent guidelines that are applicable to pollutants or pollutant properties in discharges of process wastewater resulting from the production of dairy products. These limits are addressed outside of this memo and are based on production information provided by the facility.

Dissolved Oxygen
The current permit contains a daily minimum dissolved oxygen (DO) limit of 7.0 mg/L. **No change to the DO limit is recommended**.

pH
In accordance with s. NR 102.04(4)(c), Wis. Adm. Code, pH shall be within the range of 6.0 s.u. to 9.0 s.u. for fish and aquatic life. **No changes to the pH limits are recommended**.

PART 3 – PHOSPHORUS

Technology-Based Effluent Limit
Subchapter II of Chapter NR 217, Wis. Adm. Code, requires industrial facilities that discharge greater than 60 pounds of total phosphorus per month to comply with a 12-month rolling average limit of 1.0 mg/L, or an approved alternative concentration limit.

Since Klondike Cheese Corporation has an interim phosphorus limit in effect that is more stringent than 1.0 mg/L, the need for a TBEL will not be considered further.

In addition, the need for a WQBEL for phosphorus must be considered.

Water Quality-Based Effluent Limits (WQBEL)
Revisions to administrative rules regulating phosphorus took effect on December 1, 2010. These rule revisions include additions to ch. NR 102 (s. NR 102.06), which establish phosphorus standards for surface waters. Revisions to ch. NR 217 (s. NR 217, Subchapter III) establish procedures for determining WQBELs for phosphorus, based on the applicable standards in ch. NR 102.

Section NR 102.06(3)(a) specifically names river segments for which a phosphorus criterion of 0.100 mg/L applies. For other stream segments that are not specified in s. NR 102.06(3)(a), s. NR 102.06(3)(b), Wis. Adm. Code, specifies a phosphorus criterion of 0.075 mg/L. The phosphorus criterion of 0.075 mg/L applies to the Unnamed Tributary of Skinner Creek.

The conservation of mass equation is described in s. NR 217.13 (2)(a), Wis. Adm. Code, for phosphorus WQBELs and includes variables of water quality criterion (WQC), receiving water flow rate (Qs), effluent flow rate (Qe), and upstream phosphorus concentrations (Cs):

$$\text{Limitation} = [(WQC)(Qs+(1-f)\ Qe) - (Qs-f\ Qe)\ (Cs)]/Qe$$

Where:

WQC = 0.075 mg/L for Unnamed Tributary of Skinner Creek.
Qs = 100% of the 7-Q_2 of 0.20 cfs
Cs = background concentration of phosphorus in the receiving water pursuant to s. NR 217.13(2)(d), Wis. Adm. Code
Qe = effluent flow rate = 0.097 MGD = 0.150 cfs
f = the fraction of effluent withdrawn from the receiving water = 0

Section NR 217.13(2)(d), Wis. Adm. Code, specifies that the background phosphorus concentration used in the limit calculation formula shall equal the median of at least four samples collected during the months of May through October, and that all samples collected during a 28-day period shall be considered as a single sample and the average of these concentrations used to determine a median. Averaging begins at date of the first sample in the range of May through October.

All available in stream total phosphorus data (n =14) from two different stations stored in the Surface Water Integrated Monitoring System (SWIMS) database indicates the median background total phosphorus concentration in Skinner Creek at SWIMS Stations 233237 and 10012085 were considered. Both SWIMS stations are located downstream of the Klondike Cheese Corporation outfall and are used since there is no available data upstream of the outfall.

The following data were considered in estimating the background phosphorus concentration:

SWIMS ID	233237	10012085
Station Name	Monitoring station at Skinner Creek- Cheese County Recreation Trail in Browntown	Monitoring station at Skinner Creek – Upstream of Klondike Rd.
Waterbody	Skinner Creek	Skinner Creek
Sample Count	8	6
First Sample	06/14/2005	05/20/2002
Last Sample	09/21/2006	10/13/2002
Mean	0.145 mg/L	0.080 mg/L
Median	0.125 mg/L	0.073 mg/L

Substituting a median value of 0.099 mg/L into the limit calculation equation above would result in a calculated limit that is less than the applicable criterion of 0.075 mg/L. However, s. NR 217.13(7), Wis. Adm. Code, specifies that "if the water quality-based effluent limitation calculated pursuant to the procedures in this section is less than the phosphorus criterion specified in s. NR 102.06, Wis. Adm. Code, for the water body, the effluent limit shall be set equal to the criterion."

The impaired water listing of Skinner Creek, located downstream of Outfall 002, also points towards the notion that effluent phosphorus limits equal to the water quality criterion are needed to prevent the discharge from contributing to further impairment of the receiving water. *The Guidance for Implementing Wisconsin's Phosphorus Water Quality Standards for Point Source Discharges* (2020) suggests setting effluent limits equal to the criterion in the absence of an EPA approved total maximum daily load for discharges of phosphorus to phosphorus impaired waters.

Effluent Data
The following table summarizes effluent total phosphorus monitoring data from April 2023 through June 2026.

Total Phosphorus Effluent Data

	Phosphorus (mg/L)
1-day P_{99}	0.88
4-day P_{99}	0.58
30-day P_{99}	0.24
Mean	0.08
Std	0.25
Sample size	55
Range	0.024 - 1.9

Note: A result of 30.7 mg/L, reported on 7/28/2023, was not included in the statistics above as it is assumed to be an entry error.

Reasonable Potential Determination
The discharge has reasonable potential to cause or contribute to an exceedance of the water quality criterion because the 30-day P_{99} of reported effluent total phosphorus data is greater than the calculated WQBEL**.** Therefore, **a WQBEL is required.**

Limit Expression
According to s. NR 217.14(2), Wis. Adm. Code, because the calculated WQBEL is less than or equal to 0.3 mg/L, the effluent limit of 0.075 mg/L may be expressed as a six-month average. If a concentration limitation expressed as a six-month average is included in the permit, a monthly average concentration limitation of 0.225 mg/L, equal to three times the WQBEL calculated under s. NR 217.13, Wis. Adm. Code shall also be included in the permit. The six-month average should be averaged during the months of May – October and November – April.

Mass Limit
A mass limit is also required, pursuant to s. NR 217.14(1)(a), Wis. Adm. Code, because the discharge is to a surface water that is upstream of a phosphorus impaired water. **This final mass limit shall be 0.075 mg/L × 8.34 × 0.097 MGD = 0.061 lbs/day expressed as a six-month average.**

Antidegradation and Antibacksliding
The final WQBEL mass limit of 0.061 lbs/day, calculated above based on the increased flow rate, is greater than was previously calculated (0.030 lbs/day). There is a compliance schedule in the current permit to meet the mass limit by September 30, 2031. Since the mass limit is not yet in effect, the change does not meet the definition of an increased discharge as defined in s. NR 207.04, Wis. Adm. Code, and therefore can be changed.

Compliance
The current permit contains a compliance schedule to meet the final phosphorus WQBELs by September 30, 2031.

Attachment #1

PART 4 – WATER QUALITY-BASED EFFLUENT LIMITATIONS FOR THERMAL

Surface water quality standards for temperature took effect on October 1, 2010. These regulations are detailed in chs. NR 102 (Subchapter II – Water Quality Standards for Temperature) and NR 106 (Subchapter V – Effluent Limitations for Temperature) of the Wisconsin Administrative Code. Daily maximum and weekly average temperature criteria are available for the 12 different months of the year depending on the receiving water classification.

The significance threshold of 10% of the receiving water's assimilative capacity (AC) also applies to temperature. Temperature limits for a new or increased discharges are calculated using the equations in ss. NR 106.55(6)(b) and 106.55(7)(b), Wis. Adm. Code, for different discharge scenarios. For increased discharges, the 10% threshold is calculated based on the existing thermal load to the receiving water, which means 10% of the difference between the existing temperature of the receiving water at the outfall (ambient conditions and current effluent temperature, mixed) and the loading that would occur at the higher discharge rate.

Using the projected flow rate of 0.097 MGD, the current flow rates from February 2023 through June 2026, and the maximum temperatures reported during monitoring from February 2023 through June 2026, the following temperature limits would apply.

Monthly Temperature Limits

Month	Representative Highest Monthly Effluent Temperature		Calculated 100% AC Limits		Calculated 10% AC Limits	
	Weekly Maximum (°F)	Daily Maximum (°F)	Weekly Average Effluent Limitation (°F)	Daily Maximum Effluent Limitation (°F)	Weekly Average Effluent Limitation (°F)	Daily Maximum Effluent Limitation (°F)
JAN	61	73	65	119	47	73
FEB	65	75	68	120	51	86
MAR	65	74	72	120	55	87
APR	69	81	**66**	120	**56**	89
MAY	74	81	**74**	114	**66**	89
JUN	75	80	89	107	80	90
JUL	76	81	95	103	85	89
AUG	75	81	96	102	87	92
SEP	76	84	88	107	76	85
OCT	74	80	**74**	116	**59**	79
NOV	68	77	**60**	120	**46**	71
DEC	65	74	**64**	120	**47**	76

Reasonable Potential

Permit limits for temperature are recommended based on the procedures in s. NR 106.56, Wis. Adm. Code.

- An acute limit for temperature is recommended for each month in which the representative daily maximum effluent temperature for that month exceeds the acute WQBEL. The representative daily maximum effluent temperature is the greater of the following:
  (a) The highest recorded representative daily maximum effluent temperature
  (b) The projected 99th percentile of all representative daily maximum effluent temperatures
- A sub−lethal limitation for temperature is recommended for each month in which the representative weekly average effluent temperature for that month exceeds the weekly average WQBEL. The representative weekly average effluent temperature is the greater of the following:
  (a) The highest weekly average effluent temperature for the month.
  (b) The projected 99th percentile of all representative weekly average effluent temperatures for the month

Comparing the representative highest effluent temperature to the calculated effluent limits determines the reasonable potential of exceeding the effluent limits. Based on this analysis using the full assimilative capacity calculations, **weekly average temperature limits are needed for the months of April, May, October, November, and December.** Temperature limits are only considered where there is reasonable potential shown at full assimilative capacity because the expanded discharge is not causing an initial imposition of a limit per s. NR 207.031(3)(a)3., Wis. Adm. Code, and therefore does not meet the definition of an increased discharge.

Conclusions
As there is currently no representative thermal data which includes all waste streams (RO, NCCW, and COW water), **a compliance schedule is recommended in the permit in order to collect effluent data that includes the new waste stream. If a compliance schedule is included in the permit, an interim limit of 68°F in November, equal to the limit currently in effect, is required.** The facility may apply for an antidegradation review in order to receive up to full assimilative capacity (AC) thermal limits and/or a reduction in limits if there is no longer reasonable potential using representative thermal data. **Without a full antidegradation review and approval by the Department, limits based on 10% AC would go into effect at the end of the compliance schedule.**

Thermal monitoring year-round is also recommended to continue. It should be noted that increased flow rates may trigger additional and/or more restrictive temperature limits in the future. The complete thermal table can be found in Attachment #3.

Options for Temperature Limit Relief
The following general options are available to explore potential relief from the temperature limits:

- Full antidegradation review: The facility may submit an antidegradation application to the Department in accordance with s. NR 207.031, Wis. Adm. Code.
- Effluent monitoring data: Verification or additional effluent monitoring (flow and/or temperature) may be appropriate if there were questions on the representativeness of the current effluent data.
- Collection of site-specific ambient temperature: default background temperatures for streams in Wisconsin, so actual data from the direct receiving water may provide for relaxed thermal limits but only if the site-specific temperatures are lower than the small stream defaults used in the above tables
- A variance to the water quality standard: This is typically considered to be the least preferable and most complex option as it requires the evaluation of the other alternatives.

These options are explained in additional detail in the August 15, 2013 Department *Guidance for Implementation of Wisconsin's Thermal Water Quality Standards*
https://dnr.wisconsin.gov/topic/Wastewater/Thermal.html

PART 5 – WHOLE EFFLUENT TOXICITY (WET)

WET testing is used to measure, predict, and control the discharge of toxic materials that may be harmful to aquatic life. In WET tests, organisms are exposed to a series of effluent concentrations for a given time and effects are recorded. Decisions below related to the selection of representative data and the need for WET limits were made according to ss. NR 106.08 and 106.09, Wis. Adm. Code. WET monitoring frequency and toxicity reduction evaluation (TRE) recommendations were made using the best professional judgment of staff familiar with the discharge after consideration of the guidance in the *Whole Effluent Toxicity (WET) Program Guidance Document* (2022).

- Acute tests predict the concentration that causes lethality of aquatic organisms during a 48 to 96-hour exposure. To assure that a discharge is not acutely toxic to organisms in the receiving water, WET tests must produce a statistically valid LC_{50} (Lethal Concentration to 50% of the test organisms) greater than 100% effluent, according to s. NR 106.09(2)(b), Wis. Adm Code.

- Chronic tests predict the concentration that interferes with the growth or reproduction of test organisms during a seven-day exposure. To assure that a discharge is not chronically toxic to organisms in the receiving water, WET tests must produce a statistically valid IC_{25} (Inhibition Concentration) greater than the instream waste concentration (IWC), according to s. NR 106.09(3)(b), Wis. Adm Code. The IWC is an estimate of the proportion of effluent to total volume of water (receiving water + effluent). The **IWC of 52%,** shown in the WET Checklist summary below, was calculated according to the following equation, as specified in s. NR 106.03(6), Wis. Adm Code:

$$IWC\ (as\ \%) = Q_e \div \{(1 - f)\ Q_e + Q_s\} \times 100$$

Where:

Q_e = annual average flow = 0.097 MGD = 0.150 cfs
f = fraction of the Q_e withdrawn from the receiving water = 0
Q_s = 100% of the 7-Q_{10} = 0.14 cfs

- The new IWC of 52% is greater than the previous IWC of 35% due to the increased flow rate.

- According to the *State of Wisconsin Aquatic Life Toxicity Testing Methods Manual* (s. NR 219.04, Table A, Wis. Adm. Code), a synthetic (standard) laboratory water may be used as the dilution water and primary control in acute WET tests, unless the use of different dilution water is approved by the Department prior to use. The primary control water must be specified in the WPDES permit.

- According to the *State of Wisconsin Aquatic Life Toxicity Testing Methods Manual* (s. NR 219.04, Table A, Wis. Adm. Code), receiving water must be used as the dilution water and primary control in chronic WET tests, unless the use of different dilution water is approved by the Department prior to use. The dilution water used in WET tests conducted on Outfall 002 shall be a grab sample collected from the receiving water location, upstream and out of the influence of the mixing zone and any other known discharge. The specific receiving water location must be specified in the WPDES permit.

- Shown below is a tabulation of all available WET data for Outfall 002.

WET Data History

Date Test Initiated	Acute Results LC_{50} % (% survival in 100% effluent)			
	C. dubia	Fathead minnow	Pass or Fail?	Used in RP?
06/30/2015	>100	>100	Pass	Yes
09/13/2017	>100	>100	Pass	Yes

- WET reasonable potential is determined by multiplying the highest toxicity value that has been measured in the effluent by a safety factor, to predict the likelihood (95% probability) of toxicity occurring in the effluent above the applicable WET limit. The safety factor used in the equation changes based on the number of toxicity detects in the dataset. The fewer detects present, the higher the safety factor, because there is more uncertainty surrounding the predicted value. **WET limits must be given, according to s. NR 106.08(6), Wis. Adm. Code, whenever the applicable Reasonable Potential equation results in a value greater than 1.0.**

  According to s. NR 106.08(6)(d), TUa and TUc effluent values are equal to zero whenever toxicity is not detected (i.e. when the LC_{50}, IC_{25} or $IC_{50} \geq 100\%$).

  Acute Reasonable Potential = 0 < 1.0, reasonable potential is not shown, and **an acute WET limit is not required.**

The WET checklist was developed to help DNR staff make recommendations regarding WET limits, monitoring, and other related permit conditions. The checklist indicates whether acute and chronic WET limits are needed, based on requirements specified in s. NR 106.08, Wis. Adm. Code. The checklist steps the user through a series of questions, assesses points based on the potential for effluent toxicity, and suggests monitoring frequencies based on points accumulated during the checklist analysis. As toxicity potential increases, more points accumulate, and more monitoring is recommended to ensure that toxicity is not occurring. A summary of the WET checklist analysis completed for this permittee is shown in the table below. Staff recommendations based on best professional judgment are provided below the summary table. For guidance related to reasonable potential and the WET checklist, see Chapter 1.3 of the WET Guidance Document: https://dnr.wisconsin.gov/topic/Wastewater/WET.html.

WET Checklist Summary

	Acute	Chronic
AMZ/IWC	Not Applicable. **0 Points**	IWC = 52% **10 Points**
Historical Data	2 tests used to determine RP = 0. No data from last five years. **5 Points**	No data. **5 Points**
Effluent Variability	Little variability, no violations or upsets, consistent operations. **0 Points**	Same as Acute. **0 Points**
Receiving Water Classification	Full Fish & Aquatic Life **5 Points**	Same as Acute. **5 Points**

Attachment #1

	Acute	Chronic
Chemical-Specific Data	Ammonia and chloride detected. **2 Points**	Ammonia and chloride detected. **2 Points**
Additives	No additives used. **0 Points**	No additives used. **0 Points**
Discharge Category	Dairy Facility **20 Points**	Same as Acute. **20 Points**
Wastewater Treatment	COW, RO and NCCW **0 Points**	Same as Acute. **0 Points**
Downstream Impacts	No impacts known. **0 Points**	Same as Acute. **0 Points**
Total Checklist Points:	**32 Points**	**42 Points**
Recommended Monitoring Frequency (from Checklist):	3 tests during permit term.	1x yearly.
Limit Required?	No	No
TRE Recommended? (from Checklist)	No	No

- After consideration of the guidance provided in the Department's *WET Program Guidance Document* (2022) and other information described above, **three acute and annual chronic WET tests are recommended** in the modified permit.

  Sampling WET concurrently with any chemical-specific toxic substances is recommended. Tests should be done in rotating quarters to collect seasonal information about this discharge. Chronic WET testing should continue after the permit expiration date (until the permit is reissued).

Attachment #2
Site Map

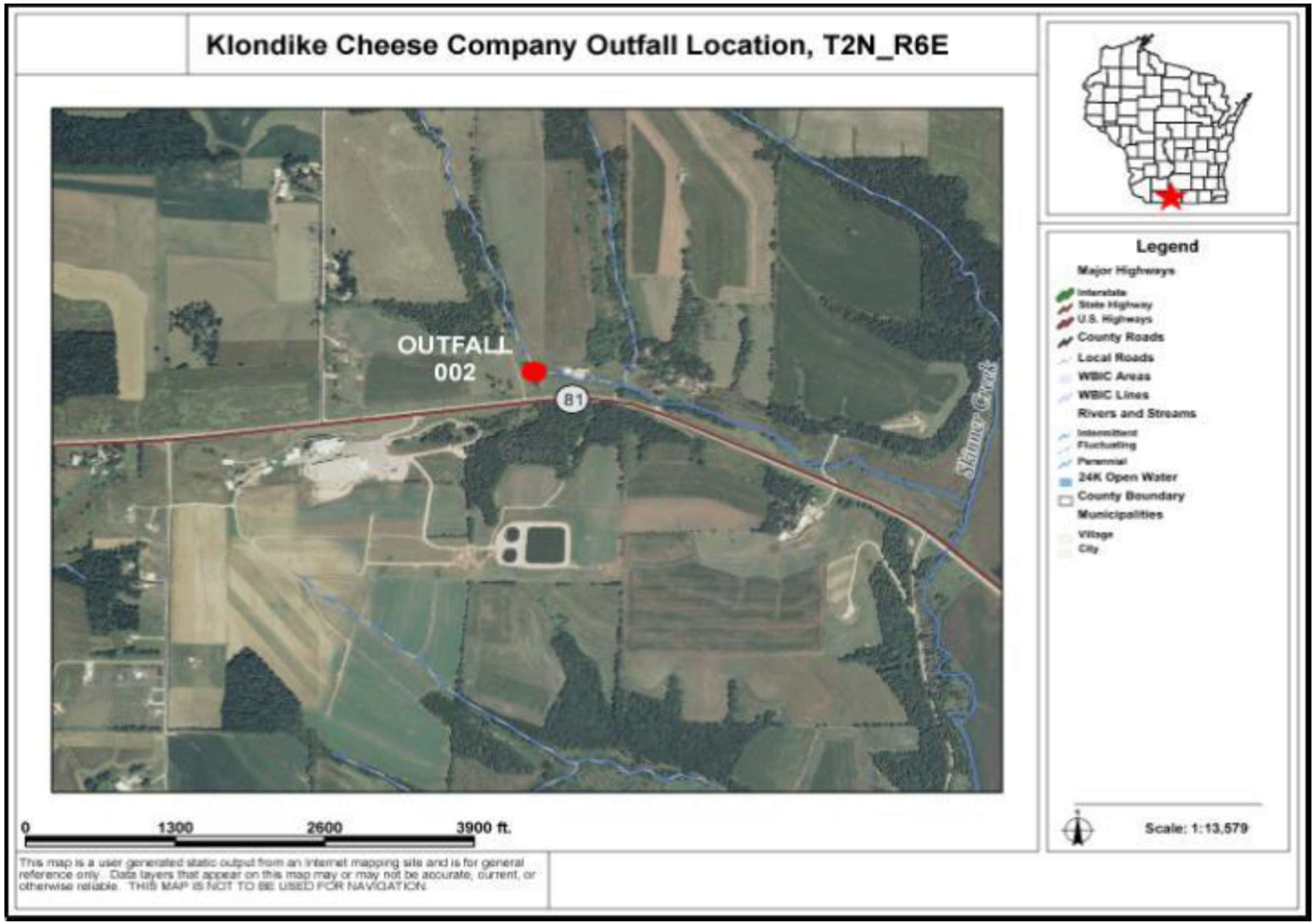

Attachment #3

Temperature limits for receiving waters with unidirectional flow

(calculation using default ambient temperature data)

Facility:	Klondike Cheese Corp		**7-Q_{10}:**	0.14	cfs	**Temp Dates**	**Flow Dates**
Outfall(s):	002		**Dilution:**	100%	**Start:**	02/01/23	*N/A* -
Date Prepared:	10/1/2026		**f:**	0	**End:**	06/30/26	*projected*
Design Flow (Qe):	0.097	MGD	**Stream type:**	Small warm water sport or forage fis			
Storm Sewer Dist.	0	ft	**Qs:Qe ratio:**	1.5	:1		
			Calculation Needed?	YES			

Month	Water Quality Criteria			Receiving Water Flow Rate (Qs)	Representative Highest Effluent Flow Rate (Qe)		f	Representative Highest Monthly Effluent Temperature		100% AC Calculated Effluent Limits		10% AC Calculated Effluent Limits	
	Ta (default)	Sub-Lethal WQC	Acute WQC		7-day Rolling Average (Qesl)	Daily Maximum Flow Rate (Qea)		Weekly Average	Daily Maximum	Weekly Average Effluent Limitation	Daily Maximum Effluent Limitation	Weekly Average Effluent Limitation	Daily Maximum Effluent Limitation
	(°F)	(°F)	(°F)	(cfs)	(MGD)	(MGD)		(°F)	(°F)	(°F)	(°F)	(°F)	(°F)
JAN	33	49	76	0.15	0.097	0.097	0	61	73	65	119	47	73
FEB	34	50	76	0.17	0.097	0.097	0	65	75	68	120	51	86
MAR	38	52	77	0.21	0.097	0.097	0	65	74	72	120	55	87
APR	48	55	79	0.23	0.097	0.097	0	69	81	**66**	120	**56**	89
MAY	58	65	82	0.20	0.097	0.097	0	74	81	**74**	114	**66**	89
JUN	66	76	84	0.19	0.097	0.097	0	75	80	89	107	80	90
JUL	69	81	85	0.17	0.097	0.097	0	76	81	95	103	85	89
AUG	67	81	84	0.16	0.097	0.097	0	75	81	96	102	87	92
SEP	60	73	82	0.17	0.097	0.097	0	76	84	88	107	76	85
OCT	50	61	80	0.18	0.097	0.097	0	74	80	**74**	116	**59**	79
NOV	40	49	77	0.18	0.097	0.097	0	68	77	**60**	120	**46**	71
DEC	35	49	76	0.16	0.097	0.097	0	65	74	**64**	120	**47**	76

CORRESPONDENCE/MEMORANDUM

State of Wisconsin

DATE: October 7, 2026

TO: Jennifer Jerich – SCR

FROM: Sarah Luck – SCR

SUBJECT: Technology-Based Effluent Limitations for Klondike Cheese Corporation
WPDES Permit No. WI-0054241-08-1

Technology-Based Effluent Limitations (TBELs) Recommended for Outfall 002:

Parameter	Daily Maximum	Daily Minimum	Monthly Average
BOD_5, Total	76 lbs/day		38 lbs/day
TSS	96 lbs/day		48 lbs/day
pH	9.0 su	6.0 su	

Printed on Recycled Paper

PART 1 – BACKGROUND INFORMATION

Klondike Cheese Corporation produces cheese (feta, muenster, brick, and Havarti) and yogurt from cow's milk. Pretreated process wastewaters are discharged to a ridge and furrow land treatment system and also to spray irrigation systems, high strength dairy wash waters are land spread, and non-contact cooling water and low-strength reverse osmosis (RO) concentrate are directed to an Unnamed Tributary of Skinner Creek via Outfall 002.

The facility reached out to the Department via email on July 15, 2026 requesting a permit modification for the addition of polished concentrate of whey (COW) water to the surface water discharge. This change would increase the total discharge to surface water to approximately 0.097 MGD as a five-day production average (per the facility's 9/25/2026 flow diagram). Klondike is expecting significant growth over the next several years with expected total surface water discharge rate of 0.12 MGD as a five-day production average by 2030 (per June 2026 correspondence).

PART 2 – INDUSTRIAL CATEGORIES

Chapter NR 240, Wis. Adm. Code, specifies effluent guidelines for discharges from dairy product categories of point sources and subcategories. Klondike Cheese Corporation would fall under the "Cultured Products", "Natural and Processed Cheese", and "Condensed Whey" subcategories as defined in s. NR 240.02, Wis. Adm. Code. These guidelines are based on federal effluent guidelines in 40 CFR Part 405 Subparts C, F, and K. The permittee must meet the applicable effluent limit guidelines as described in this chapter. These effluent limit guidelines include:

- Effluent limitations representing the degree of effluent reduction attainable by the application of the best practicable control technology currently available (BPT) in s. NR 240.10, Wis. Adm. Code.
- Effluent limitations representing the degree of effluent reduction attainable by the application of the best available technology economically achievable (BAT) in s. NR 240.11, Wis. Adm. Code.
- If determined to be a new source, new source performance standards (NSPS) in s. NR 240.12, Wis. Adm. Code.

If the calculated limits are less than or equal to the limits in the current permit, then the limits would be set equal to the recalculated limits. If the recalculated limits are less restrictive than the limits from the current permit, they cannot be increased unless the the antidegradation and anti-backsliding provisions of ch. NR 207, Wis. Adm. Code, are met.

Section NR 220.13, Wis. Adm. Code, includes provisions that address cases where federal and state rule differ. Section 283.11, Wis. Stats., address compliance with federal standards. In this case, the state rules are consistent with federal rules with a few exceptions. In such cases, the permit will in all cases be based on the state rule notwithstanding the federal regulations. The omissions are described below.

- The state or federal rules do not specify a date for the definition for a new source. Therefore, it is necessary to review available federal guidance. The Boornazian memo (September 28, 2006) specifies a new source date for 40 CFR Part 405 Subparts A – L of May 28, 1974. The Department relies on the Boornazian memo to establish date of applicability for NSPS.

- State rules incorrectly list best available treatment (BAT) standards for BOD, TSS, and pH. BAT applies to priority pollutants and nonconventional pollutants and does not apply to BOD, TSS or pH.
- The federal standard rule lists revised BCT standards requirements. All BCT limitations are set to be the same as the best practicable control technology (BPT) standards. State rules in ch. NR 240, Wis. Adm. Code, do not list standards for BCT.

PART 3 – LEVELS OF CONTROL

All processes were constructed and commenced after May 28, 1974. Therefore, the process wastewater from these lines are subject to BPT, BCT, BAT and NSPS standards for the "Cultured Products", "Natural and Processed Cheese", and "Condensed Whey" subcategories as specified in 40 CFR Part 405 Subparts C, F, and K and ch. NR 240.12, Wis. Adm. Code.

PART 4 – CURRENT PRODUCTION LEVELS

The material used for each Subcategory were provided by Klondike Cheese Corporation via the flow diagram included on page 8 and are based on five days per week production.

Natural and Processed Cheese

Raw Materials	Material Used (lbs/day)
Milk (Whole, 3.5% Fat)	890,000
Whey (fluid)	224,000
Skim milk (used as equivalent for powdered Milk)	443,000

Cultured Products (Yogurt)

Raw Materials	Material Used (lbs/day)
Milk (Whole, 3.5% Fat)	370,000
Skim milk (used as equivalent for non-fat dry milk)	35,300
Skim milk (used as equivalent for milk protein concentrate)	46,000

Whey Protein (sent offsite) and Whey Lactose

Raw Material	Material Used (lbs/day)	Flow % Discharged to Surface Water*	Material Used for Calculation (lbs/day)
Cheese whey (fluid)	802,000	96%	769,920

**This percentage was calculated by dividing the amount of Whey Lactose generated (200.6 Mlbs/year) by ultra filtration by the total amount of cheese whey (209.0 MLbs/year) since 8.4 Mlbs/year whey protein is sent offsite.*

"Condensed Whey" (as proxy for Concentrated Lactose)

Raw Material	Material Used (lbs/day)	Flow % Discharged to Surface Water*	Material Used for Calculation (lbs/day)
Whey fluid (equivalent for yogurt permeate and whey lactose)	992,000	84%	833,280

**This percentage was calculated by dividing the amount of RO Permeate generated (216.5 Mlbs/year) by the total amount of whey lactose and yogurt permeate going into RO concentration (258.6 MLbs/year).*

"Condensed Whey" (as proxy for Polisher Permeate/RO Polisher Permeate Excess)

Raw Material	Material Used (lbs/day)	Flow % Discharged to Surface Water*	Material Used for Calculation (lbs/day)
Whey fluid (equivalent for RO permeate)	831,000	60%	498,600

**This percentage was calculated by dividing the amount of RO Polisher Permeate Excess going to Outfall 002 (129.9 Mlbs/year) by the total amount of RO Permeate entering the polisher (216.5 MLbs/year).*

PART 5 – BOD INPUT

The BOD_5 input is the 5-day biochemical oxygen demand of raw materials that enter the process. The current production levels in Part 4 are converted to BOD input equivalents by multiplying the amount of raw material by BOD factors specified in s. NR 240.03(1) or s. NR 240.07 Wis. Adm. Code and 40 CFR Part 405.

Natural and Processed Cheese

Input Material	Material Used (lbs/day)	BOD_5 Factor[1] (lbs/100 lbs)	Adjusted Total BOD_5 Input[2] (lbs/day)
Milk (Whole, 3.5% Fat)	890,000	10.23	91,047

Input Material	Material Used (lbs/day)	BOD_5 Factor[1] (lbs/100 lbs)	Adjusted Total BOD_5 Input[2] (lbs/day)
Whey (fluid)	224,000	4.72	10,573
Skim milk (used as equivalent for powdered Milk)	443,000	7.44	32,959
Total			**134,579**

Cultured Products (Yogurt)

Input Material	Material Used (lbs/day)	BOD_5 Factor[1] (lbs/100 lbs)	Adjusted Total BOD_5 Input[2] (lbs/day)
Milk (Whole, 3.5% Fat)	370,000	10.23	37,851
Skim milk (used as equivalent for non-fat dry milk)	35,300	7.44	2,626
Skim milk (used as equivalent for milk protein concentrate)	46,000	7.44	3,422
Total			**43,899**

"Condensed Whey" (as proxy for Whey Protein and Whey Lactose)

Input Material	Material Used for Calculation (lbs/day)	BOD_5 Factor[1] (lbs/100 lbs)	Adjusted Total BOD_5 Input[2] (lbs/day)
Cheese whey (fluid)	769,920	4.72	36,340

"Condensed Whey" (as proxy for Concentrated Lactose)

Raw Material	Material Used for Calculation (lbs/day)	BOD_5 Factor[1] (lbs/100 lbs)	Adjusted Total BOD_5 Input[2] (lbs/day)
Whey fluid (equivalent for yogurt permeate and whey lactose)	833,280	4.72	39,331

"Condensed Whey" (as proxy for Polisher Permeate/RO Polisher Permeate Excess)

Raw Material	Material Used for Calculation (lbs/day)	BOD_5 Factor[1] (lbs/100 lbs)	Adjusted Total BOD_5 Input[2] (lbs/day)
Whey fluid (equivalent for RO permeate)	498,600	4.72	23,534

Total "condensed whey"	**99,205**

Footnotes:
1. The BOD Factors are listed in ch. NR 240.07 Wis. Adm. Code, Table 1, for generally accepted published values for protein, fat, and carbohydrate content.
2. Adjusted Total BOD input = BOD input * BOD factor / 100

PART 6 – TBEL CALCULATIONS FOR NATURAL & PROCESSED CHEESE

pH
Any discharge subject to BPT, BCT, or NSPS limitations or standards in this part must remain within the pH range of 6.0 to 9.0.

New Source Performance Standards (NSPS)
Production commenced construction after May 28th, 1974. Therefore, the NSPS limitations of 40 CFR Part 405.65 apply.

Total BOD_5 Input (lbs/day)	NSPS Effluent Limitations				Calculated Limits			
	BOD_5 (lbs/1,000 lbs)		TSS (lbs/1,000 lbs)		BOD_5 (lbs/day)[1]		TSS (lbs/day)[2]	
	Monthly Avg	Daily Max	Monthly Avg	Daily Max	Monthly Avg	Daily Max	Monthly Avg	Daily Max
134,579	0.080	0.16	0.10	0.20	10.8	21.5	13.5	26.9

Footnotes:
1. The limits (lbs/day) = total BOD_5 input (lbs/day) / 1000 * BOD NSPS limitations
2. The limits (lbs/day) = total BOD input (lbs/day) / 1000 * TSS NSPS limitations

PART 7 – TBEL CALCULATIONS FOR CULTURED PRODUCTS

pH
Any discharge subject to BPT, BCT, or NSPS limitations or standards in this part must remain within the pH range of 6.0 to 9.0.

New Source Performance Standards (NSPS)
Production commenced construction after May 28th, 1974. Therefore, the NSPS limitations of 40 CFR Part 405.35 apply.

Total BOD_5 Input (lbs/day)	NSPS Effluent Limitations				Calculated Limits			
	BOD_5 (lbs/1,000 lbs)		TSS (lbs/1,000 lbs)		BOD_5 (lbs/day)[1]		TSS (lbs/day)[2]	
	Monthly Avg	Daily Max	Monthly Avg	Daily Max	Monthly Avg	Daily Max	Monthly Avg	Daily Max
43,899	0.37	0.74	0.46	0.93	16.2	32.5	20.2	40.8

Footnotes:

1. The limits (lbs/day) = total BOD_5 input (lbs/day) / 1000 * BOD NSPS limitations
2. The limits (lbs/day) = total BOD input (lbs/day) / 1000 * TSS NSPS limitations

PART 8 – TBEL CALCULATIONS FOR CONDENSED WHEY

pH

Any discharge subject to BPT, BCT, or NSPS limitations or standards in this part must remain within the pH range of 6.0 to 9.0.

New Source Performance Standards (NSPS)

Production commenced construction after May 28th, 1974. Therefore, the NSPS limitations of 40 CFR Part 405.115 apply.

Total BOD_5 Input (lbs/day)	NSPS Effluent Limitations				Calculated Limits			
	BOD_5 (lbs/1,000 lbs)		TSS (lbs/1,000 lbs)		BOD_5 (lbs/day)[1]		TSS (lbs/day)[2]	
	Monthly Avg	Daily Max	Monthly Avg	Daily Max	Monthly Avg	Daily Max	Monthly Avg	Daily Max
99,205	0.11	0.22	0.14	0.28	10.9	21.8	13.9	27.8

Footnotes:

1. The limits (lbs/day) = total BOD_5 input (lbs/day) / 1000 * BOD NSPS limitations
2. The limits (lbs/day) = total BOD input (lbs/day) / 1000 * TSS NSPS limitations

PART 9 – FINAL CALCULATED LIMITS

Per s. NR 240.06(4) Wis. Adm. Code, the total discharge limits shall be the total of the amounts calculated from the BOD input in each of the final product subcategories and all of the other subcategories with intermediate products in Parts 6,7, and 8 of this memo.

Subcategory	Monthly Average BOD (lbs/day)	Daily Maximum BOD (lbs/day)	Monthly Average TSS (lbs/day)	Daily Maximum TSS (lbs/day)
Natural and Processed Cheese	10.8	21.5	13.5	26.9
Cultured Products	16.2	32.5	20.2	40.8
Condensed Whey	10.9	21.8	13.9	27.8
Total	**38**	**76**	**48**	**96**

Final Calculated Effluent Limitations

Parameter & Units	Daily Maximum	Daily Minimum	Monthly Average
BOD_5	76 lbs/day		38 lbs/day
TSS	96 lbs/day		48 lbs/day
pH	9.0 su	6.0 su	

The daily maximum and monthly average concentration limits in the WQBEL memo dated October 7, 2026 are also recommended to be included in the reissued permit along with the mass limits that are recommended in this TBEL memo.

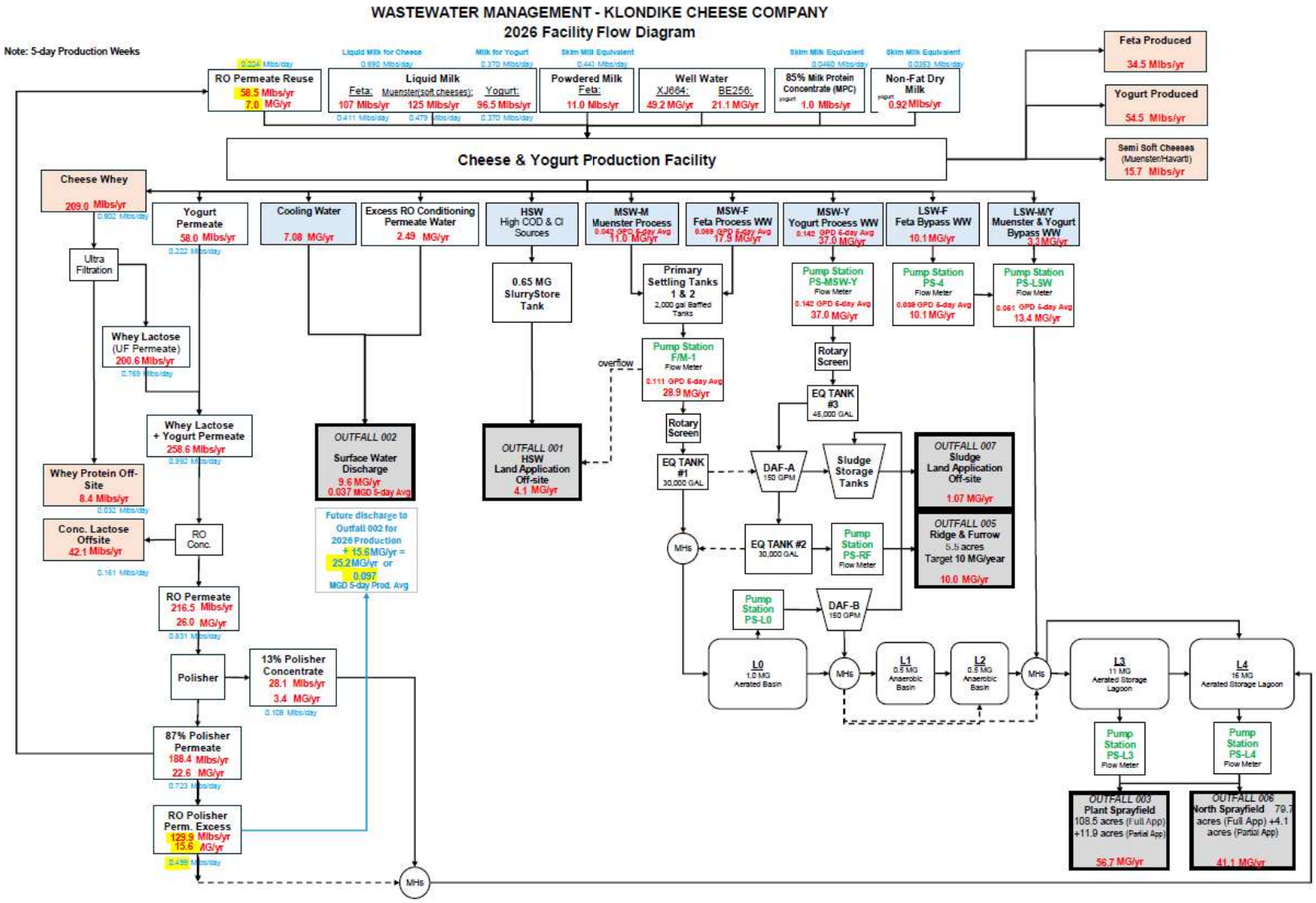
WASTEWATER MANAGEMENT - KLONDIKE CHEESE COMPANY
2026 Facility Flow Diagram
Note: 5-day Production Weeks
RO Permeate Reuse
58.5 Mlbs/yr
7.0 MG/yr
Liquid Milk
Feta: 107 Mlbs/yr
Muenster(soft cheeses): 125 Mlbs/yr
Yogurt: 96.5 Mlbs/yr
Powdered Milk
Feta: 11.0 Mlbs/yr
Well Water
XJ664: 49.2 MG/yr
BE256: 21.1 MG/yr
85% Milk Protein Concentrate (MPC)
1.0 Mlbs/yr
Non-Fat Dry Milk
0.92 Mlbs/yr
Feta Produced
34.5 Mlbs/yr
Yogurt Produced
54.5 Mlbs/yr
Semi Soft Cheeses
(Muenster/Havarti)
15.7 Mlbs/yr
Cheese & Yogurt Production Facility
Cheese Whey
209.0 Mlbs/yr
Yogurt Permeate
58.0 Mlbs/yr
Cooling Water
7.08 MG/yr
Excess RO Conditioning Permeate Water
2.49 MG/yr
HSW
High COD & CI Sources
MSW-M
Muenster Process
11.0 MG/yr
MSW-F
Feta Process WW
17.9 MG/yr
MSW-Y
Yogurt Process WW
37.0 MG/yr
LSW-F
Feta Bypass WW
10.1 MG/yr
LSW-M/Y
Muenster & Yogurt Bypass WW
3.3 MG/yr
Ultra Filtration
Whey Lactose (UF Permeate)
200.6 Mlbs/yr
0.769 Mlbs/day
0.65 MG SlurryStore Tank
Primary Settling Tanks 1 & 2
2,000 gal Baffled Tanks
Pump Station PS-MSW-Y
Flow Meter
0.142 GPD 6-day Avg
37.0 MG/yr
Pump Station PS-4
Flow Meter
0.039 GPD 6-day Avg
10.1 MG/yr
Pump Station PS-LSW
Flow Meter
0.051 GPD 6-day Avg
13.4 MG/yr
Whey Lactose + Yogurt Permeate
258.6 Mlbs/yr
0.992 Mlbs/day
OUTFALL 002
Surface Water Discharge
9.6 MG/yr
0.037 MGD 5-day Avg
OUTFALL 001
HSW
Land Application Off-site
4.1 MG/yr
overflow
Pump Station FIM-1
Flow Meter
0.111 GPD 6-day Avg
28.9 MG/yr
Rotary Screen
EQ TANK #3
45,000 GAL
Whey Protein Off-Site
8.4 Mlbs/yr
0.032 Mlbs/day
Rotary Screen
EQ TANK #1
30,000 GAL
DAF-A
150 GPM
Sludge Storage Tanks
OUTFALL 007
Sludge
Land Application Off-site
1.07 MG/yr
Conc. Lactose Offsite
42.1 Mlbs/yr
0.161 Mlbs/day
RO Conc.
Future discharge to Outfall 002 for 2026 Production
+ 15.6 MG/yr =
25.2 MG/yr or
0.097
MGD 5-day Prod. Avg
MHs
EQ TANK #2
30,000 GAL
Pump Station PS-RF
Flow Meter
OUTFALL 005
Ridge & Furrow
5.5 acres
Target 10 MG/year
10.0 MG/yr
RO Permeate
216.5 Mlbs/yr
26.0 MG/yr
0.831 Mlbs/day
Pump Station PS-L0
DAF-B
150 GPM
Polisher
13% Polisher Concentrate
28.1 Mlbs/yr
3.4 MG/yr
0.108 Mlbs/day
L0
1.0 MG
Aerated Basin
MHs
L1
0.5 MG
Anaerobic Basin
L2
0.5 MG
Anaerobic Basin
MHs
L3
11 MG
Aerated Storage Lagoon
L4
16 MG
Aerated Storage Lagoon
87% Polisher Permeate
188.4 Mlbs/yr
22.6 MG/yr
0.723 Mlbs/day
Pump Station PS-L3
Flow Meter
Pump Station PS-L4
Flow Meter
OUTFALL 003
Plant Sprayfield
108.5 acres (Full App)
+11.9 acres (Partial App)
56.7 MG/yr
OUTFALL 006
North Sprayfield 79.7 acres (Full App) +4.1 acres (Partial App)
41.1 MG/yr
RO Polisher Perm. Excess
129.9 Mlbs/yr
15.6 MG/yr
0.499 Mlbs/day
MHs
Applied Science, Inc.
9/25/2026