Appendix C

Long Term Care and Maintenance Plan

Long Term Care and Maintenance Plan

Milwaukee Estuary AOC Dredged Material Management Facility

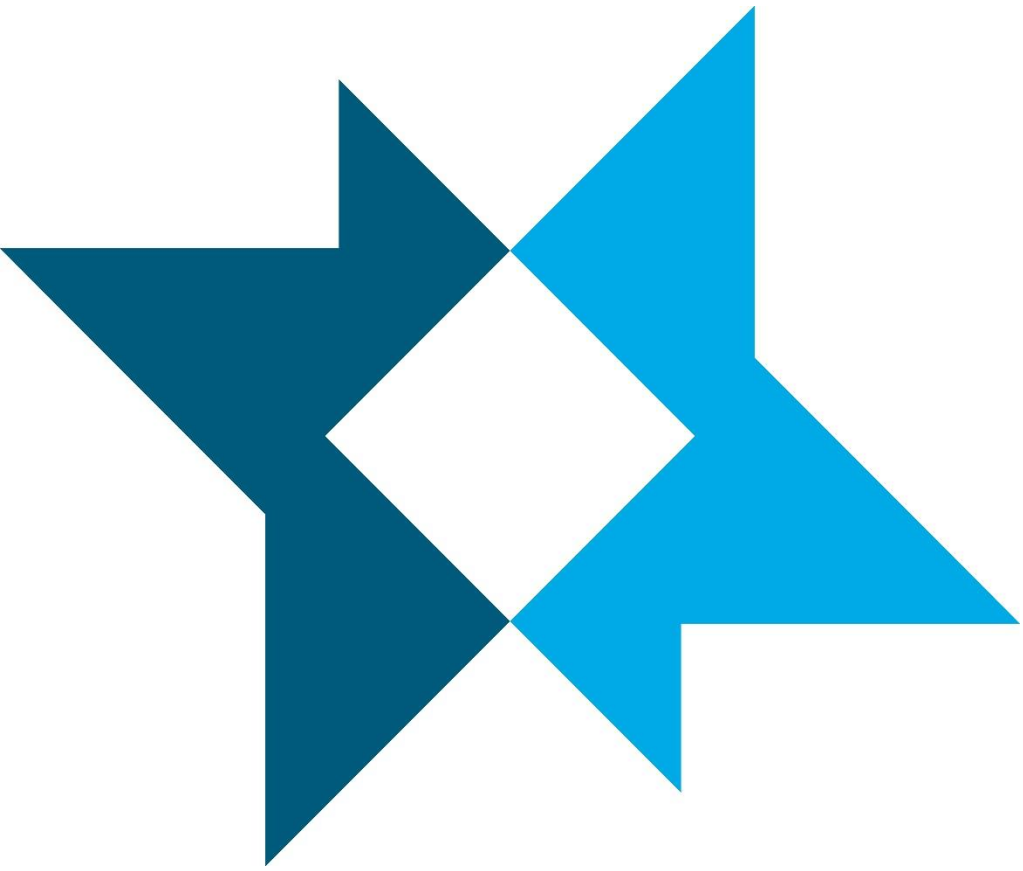

Milwaukee Metropolitan Sewerage District
Milwaukee, Wisconsin

April 2021

Foth Project I.D.: 20M144
MMSD Project I.D.: M98001P01

Ballpark Commons Office Building
7044 S. Ballpark Dr., Suite 200
Franklin, WI 53132
(414) 336-7900
www.foth.com

April 23, 2021

Ms. Bridget Henk
Senior Project Manager
Milwaukee Metropolitan Sewerage District
260 W. Seeboth Street
Milwaukee, WI 53204

RE: *Long Term Care and Maintenance Plan*
Milwaukee Estuary AOC Dredged Material Management Facility

Dear Ms. Henk:

Attached to this letter is the project *Long Term Care and Maintenance Plan* (*LTCMP*), which is intended to meet contract requirements included in Appendix A (Scope of Services, Dredged Material Management Facility [DMMF] Permitting Task) Section B Permitting Assistance, Task 1 of the contract between the Milwaukee Metropolitan Sewerage District (District) and Foth Infrastructure & Environment, LLC (Foth) dated December 7, 2020 (Contract).

We appreciate this opportunity to provide the District with these services and will appreciate your feedback regarding this document.

Sincerely,

Foth Infrastructure & Environment, LLC

Michael S. Raimonde
Project Manager

Stephen Garbaciak Jr., P.E.
Senior Technology Leader

cc: Tom Chapman, MMSD
Steve Laszewski, Foth

Long Term Care and Maintenance Plan

MMSD Project ID: M98001P01
Foth Project ID: 20M144

Prepared for

Milwaukee Metropolitan Sewerage District

260 W. Seeboth Street
Milwaukee, WI 53204

Prepared by

Foth Infrastructure & Environment, LLC

April 2021

REUSE OF DOCUMENTS

This document (including any enclosures and attachments) has been prepared for the exclusive use and benefit of the addressee(s) and solely for the purpose for which it is provided. Any use outside of said purpose and/or by anyone other than the addressee(s) is at the unauthorized user's sole risk.

Copyright©, Foth Infrastructure & Environment, LLC 2021

Ballpark Commons Office Building - 7044 S. Ballpark Dr., Suite 200 - Franklin, WI 53132 - (414) 336-7900 • www.foth.com

Long Term Care and Maintenance Plan

Table of Contents

Page

List of Abbreviations, Acronyms, and Symbols iv

1 Introduction 1
- 1.1 Purpose 1
- 1.2 Scope of Work 1
- 1.3 Regulatory Requirements 1
- 1.4 Methodology Citations 2

2 Post-Closure Monitoring 3
- 2.1 Water Level Management 3
- 2.2 Effluent Monitoring 3

3 Post-Closure Inspections and Documentation 4
- 3.1 Inspection Types and Frequencies 4
  - 3.1.1 New Construction Inspection 4
  - 3.1.2 Baseline Inspection 4
  - 3.1.3 Routine Inspection 4
  - 3.1.4 Structural Repair or Upgrade Design Inspections 5
  - 3.1.5 Special Purpose Inspection 5
  - 3.1.6 Post-Event Inspection 5
- 3.2 Element-Level Damage Rating 6
- 3.3 Recommendation of Actions 6
- 3.4 Inspection Checklist 6
- 3.5 Documentation 7

4 Routine Maintenance Activities 8

5 Future Development 9
- 5.1 Contaminant Considerations 9
- 5.2 Consistency and Load Considerations 9
- 5.3 Structural Design Considerations 10

6 Cost Considerations 11

7 References 12

Tables

Table 2-1 Inspection and Maintenance Activities
Table 2-2 Post-Closure Inspection Log

Figures

Figure 1-1 Site Location

Appendices

Appendix A Final Design Drawings

List of Abbreviations, Acronyms, and Symbols

AOC	Area of Concern
ASCE	American Society of Civil Engineers
CDF	Confined Disposal Facility
CQAP	*Construction Quality Assurance Plan*
cy	cubic yards
District	Milwaukee Metropolitan Sewerage District
DMDF	Dredged Material Disposal Facility
DMMF	Dredged Material Management Facility
FCP	*Facility Closure Plan*
Foth	Foth Infrastructure & Environment, LLC
LHE	Low Hazard Exemption
LTCMP	*Long Term Care and Maintenance Plan*
USACE	U.S. Army Corps of Engineers
USEPA	U.S. Environmental Protection Agency
WDNR	Wisconsin Department of Natural Resources

1 Introduction

The Milwaukee Estuary Area of Concern (AOC) Dredged Material Management Facility (DMMF) will be a newly-constructed facility to manage dredged material within the Milwaukee Estuary AOC. Management of the dredged material is key to achieving the goal established for the AOC by establishing a facility to manage contaminated sediments and other dredged materials that will help remove Beneficial Use Impairments and eventually lead to the delisting of the AOC from the 1987 designation by the U.S. Environmental Protection Agency (USEPA). The facility will provide storage for 1.9 million cubic yards (cy) of material (1.4 million cy of impacted sediments dredged within the Milwaukee Estuary AOC; 200,000 cy of material removed for Port commercial navigation purposes; and 300,000 cy of material from MMSD watercourse projects that include dredged materials and upland soils). The DMMF will be located north of and adjacent to the United States Army Corps of Engineers (USACE) Milwaukee Harbor Dredged Material Disposal Facility (DMDF), in the location shown on Figure 1-1.

1.1 Purpose

This *Long Term Care and Maintenance Plan (LTCMP)* provides guidance on the maintenance of the DMMF following filling with dredged material and closure (refer to the *Facility Closure Plan [FCP] [*Foth, 2021a]). Maintenance of the physical features are described, including inspection types and frequencies for the facility elements to allow for repairs and replacement, which are described in the sections to follow.

1.2 Scope of Work

This *LTCMP* is being written based on currently available information in advance of construction, dredging, filling, and closure, and will need to be revisited as these actions are implemented and completed and additional information becomes available, as further identified in the sections below.

This *LTCMP* is separated into four sections:

- Section 1 provides an introduction and purpose of the *LTCMP*.
- Section 2 describes the post-closure monitoring anticipated for the DMMF.
- Section 3 describes post-closure inspections and documentation.
- Section 4 describes the post-closure maintenance activities expected for the DMMF.
- Section 5 provides the considerations for future development of the DMMF.
- Section 6 describes the cost considerations for long-term care and maintenance of the DMMF.

1.3 Regulatory Requirements

There are no Wisconsin statutes or administrative code requirements that directly address the design and operation of a DMMF. Prior Wisconsin approvals for similar facilities were grants of low hazard waste exemption. "The State of Wisconsin Approval Process for Dredging of Commercial Ports, Guidance for Applicants and WDNR [Wisconsin Department of Natural

Resources] Staff", PUB -FH-061-2004 (WDNR, 2004), states that "The applicant for any new CDF [Confined Disposal Facility] would have to demonstrate that the facility is eligible for a low hazard exemption under s. 289.43 (8), Wis. Stats. In that case, there would be no licensing or other requirements by the Waste Program under landfill siting laws."

The WDNR "Exempting Low Hazard Wastes from Solid Waste Regulations," PUB-WA-1645 (WDNR, 2015), provides guidance on preparing a Low Hazard Exemption (LHE) in accordance with s. 289.43(8). To meet Agency expectations for the information necessary to approving an LHE for the DMMF, three supporting documents are being developed to assure that the DMMF will be constructed and operated safely and in compliance with state solid waste regulations:

- *Facility Closure Plan (FCP)* (Foth, 2021a)
- *Construction Quality Assurance Plan (CQAP)* (Foth, 2021b)
- *Long Term Care and Maintenance Plan (LTCMP)*

1.4 Methodology Citations

Methodology for post-closure monitoring, inspection, and maintenance activities provided in this *LTCMP* were developed largely based on the American Society of Civil Engineers (ASCE) Manuals and Reports on Engineering Practice No. 130, *Waterfront Facilities Inspection and Assessment* (ASCE, 2015) (herein called, *Waterfront Facilities Inspection and Assessment guide*).

2 Post-Closure Monitoring

The post closure monitoring activities will be initiated upon completion of the final cover construction and will focus on maintaining the integrity of containment.

2.1 Water Level Management

Upon completion of placement of dredged material in the DMMF, pumping out of the last of the ponded water, and placement of the cover material, the DMMF will transition to long-term management of consolidation and water handling. The long-term process will focus on managing water from the interior of the facility to maintain structural stability, and managing any precipitation run off on the site. Water levels in the DMMF will be continuously monitored, and the water conveyance system will be pumped as necessary to keep the interior ground water level at the required elevation. To handle this water, design and implementation of collection structures will need to be completed based upon the final grades and material properties of the placed dredged material. Additional detail is presented in the *FCP*.

2.2 Effluent Monitoring

Effluent pumped from the DMMF will be conveyed to the Long-Term Water Treatment Facility (as described in the *FCP*) and will be subject to water quality compliance standards set forth by the regulatory agencies through the various permits awarded to the facility. To achieve these requirements, water cannot be discharged with contaminant concentrations higher than calculated effluent limits as applied to the facility in the appropriate permits. Requirements for effluent monitoring/sampling will be updated as additional information becomes available. Additional detail on anticipated water quality is presented in the *FCP*.

3 Post-Closure Inspections and Documentation

The DMMF structures have been designed to a 100-year design life. All structures have been evaluated for 100-year environmental loads (e.g., lake level, wave climate, wind speeds). The steel components of the DMMF walls have been evaluated for steel loss and corrosion rates over a 100-year design life. Steel has been designed using coatings to minimize exposure and steel loss, increasing design life. To maximize the life of the steel, sacrificial anodes have been incorporated into the structure. These anodes will help with the prevention of steel corrosion as they are periodically replaced, approximately every 3-5 years. Long term maintenance of the steel structures will include periodic inspections for steel loss throughout the operating life of the structures. Routine maintenance and repair to damaged sections of steel will extend the life of the structure. Design drawings for the structures are provided in Appendix A. General information pertaining to anticipated inspections and maintenance are described in the sections below. For additional detail, refer to the *Waterfront Facilities Inspection and Assessment guide*.

3.1 Inspection Types and Frequencies

3.1.1 New Construction Inspection

New construction inspections will be conducted if/when new structures are constructed or structures are expanded. The objectives of these inspections are to ensure quality control during new construction, verify installed quantities for contractor payment, and to respond to field questions and problems during new construction.

3.1.2 Baseline Inspection

Baseline inspections are conducted following the new construction inspection to verify that structures were built according to designs and ensure that no significant defects exist on the structure prior to final acceptance. The baseline inspection will be conducted near the completion of construction, prior to owner acceptance.

3.1.3 Routine Inspection

Routine inspections will be conducted by the owner to assess and rate the overall condition of an existing structure, determine what future maintenance activities are necessary on a structure, estimate the remaining useful life of the structure (may require special purpose inspection, see Section 3.1.5), and used as a screening mechanism to determine if and when other inspections may need to be conducted. A routine inspection is limited to the collection of sufficient information to address each key objective. In most cases, documenting the exact location and size of each observed defect is not necessary. Rather, rating components on a relative scale (as described below) is standard practice. When observed damage could have a significant effect on the load-bearing capacity of a structural component, sufficient data should be collected in the field to allow the damage to be quantified by structural analysis. Section 3.2, of the *Waterfront Facilities Inspection and Assessment guide*, provides additional detail regarding levels of effort (Level I, II, or III Inspection), methods, and documentation for routine inspections.

The frequency of routine inspections depends on several variables, including material type, age of structure, importance of the structure, and physical environment of the structure. Based on

Table 2-2, of the *Waterfront Facilities Inspection and Assessment guide,* routine inspections will be performed every 5 years for the first 25 years and increasing in frequency as necessary based on deterioration of the structures. The first inspection will be completed as baseline during the first year after completion of the final cover.

Routine inspections will include inspection of structures, coatings, grout mattresses, and stability of the connector berm adjacent to the existing DMDF.

A Condition Assessment Rating will be assigned upon completion of the routine inspection, as identified in the *Waterfront Facilities Inspection and Assessment guide,* specifically Table 2-14 Condition Assessment Ratings. Judgment must be applied in considering:

- Scope of damage (total number of defects);
- Severity of damage (type and size of defects);
- Distribution of damage (local vs. general);
- Types of components affected (their structural "sensitivity");
- Location of defect on component (relative to point of maximum moment/shear); and
- Serviceability.

3.1.4 Structural Repair or Upgrade Design Inspections

A repair or upgrade design inspection is conducted once the decision to proceed with repairs has been made or if better repair cost data are desired. During this type of inspection, details of defects to be repaired are documented, including location and size of defects, methods of repairs are assigned, and detailed quantity estimates for rehabilitation work are developed. The need for this type of inspection will be determined during routine monitoring inspections.

3.1.5 Special Purpose Inspection

A special purpose inspection may be required if a more in-depth investigation involving various types of in-situ and/or laboratory testing may be required. Special purpose inspections are conducted when the cause of deterioration is unknown, or where multiple degradation mechanisms contribute to the deterioration. The objectives of this type of inspection are to quantify the extent of observed deterioration, determine the structural significance of observed damage, and determine the significance of observed damage on future durability. The need for this type of inspection will be determined during routine monitoring inspections.

3.1.6 Post-Event Inspection

Post-event inspections will be conducted promptly in response to significant, potentially damage-causing events such as a flood, storm, or vessel impact. For this facility a post-event inspection should be performed after any vessel impact to the structural walls of the facility, greater than 100-year wave event, and/or greater than 100-year storm event (wind, rainfall). Evaluation of the recurrence interval data for storms and other climatic events are presented in the *Final Design Report, Appendix D: Metocean Report* (Foth, 2020). This evaluation was completed based on the current available data, however ongoing work is being done to reevaluate historical data and thus the calculated storm return periods may change based on that work. Understanding

of changes to storm return periods based on climate changes will need to be kept during the life of the structure.

The primary purpose of a post-event inspection is to thoroughly assess and rate the structural stability of the structure and/or to determine if further attention to the structure is necessary as a result of the event. The scope of the inspection will be dictated by the type and severity of the event (e.g., whether inspection below and/or above the waterline is required). Specific guidance can be found in the *Waterfront Facilities Inspection and Assessment guide.*

Documentation resulting from a post-event inspection will provide a comprehensive assessment of any potential harm to the protectiveness of the structure. A rating system will be used to indicate if further attention is required and how urgent such attention should be. The rating system used for a post-event inspection is different from the rating system used during a routine inspection, because the post-event rating should focus on event related damage only. Guiding principles should be followed when assigning post-event damage ratings; damage ratings for structure materials are found in the *Waterfront Facilities Inspection and Assessment guide*, specifically Table 2-15, Post-event Damage Ratings. Note that, though it is not the focus, general observations of significant damage not related to the event, such as significant corrosion damage or other deterioration, should be mentioned as appropriate during this inspection as well.

3.2 Element-Level Damage Rating

A damage rating is assigned to each element inspected during an investigation. The rating reflects the condition of the individual element only and is independent of the element's structural importance and the type of inspection being conducted. Element-level damage ratings are standardized to provide a qualitative description of an element's condition based on a quantified level of damage. By using a quantified scale, objectivity is maintained throughout the inspection. Section 2.5, of the *Waterfront Facilities Inspection and Assessment guide*, provides damage ratings typically used for timber, steel, reinforced concrete, and pre-stressed concrete elements.

3.3 Recommendation of Actions

Recommended actions will be assigned upon completion of each inspection which describe the specific actions that should be taken for each type of inspection. A description of each recommended action choice is provided in Table 2-16 of the *Waterfront Facilities Inspection and Assessment guide*. Typical recommended action options for each inspection type are depicted on Figure 2-15, of the *Waterfront Facilities Inspection and Assessment guide*. Multiple recommended actions may be assigned upon completion of each inspection; however, guidance should be provided to indicate the order in which the recommended actions should be carried out.

3.4 Inspection Checklist

Table 2-1 contains a list of items that need to be inspected and recorded. This list should be considered as a typical listing of the inspection activities. If the final construction configuration

changes, additional items may be added to the inspection list. Table 2-1 should be considered a guidance which should be updated as necessary. The observations recorded should be supplemented with photographs of items that require repair or maintenance. These photographs should be filed with the inspection reports (further described below).

3.5 Documentation

The findings and observations of each inspection should be documented on the form included as Table 2-2. Table 2-2 can be used by the inspector in the field to record the observation of the conditions of the items listed as well as to track any necessary repair or maintenance work. The completed inspection forms shall be included with the Facility Inspection Report submitted to the WDNR after each inspection.

The Facility Inspection Report will describe the inspection methodology (i.e., Level I Inspection, Level II Inspection, Level III Inspection, Above Water Inspection, Below Water Inspection, etc.), summarize observations and assessments made during the inspection, and recommend repairs and/or maintenance, if required. This report may also consider constructability and costs of repair alternatives. Photographs taken during the inspection will be included in the report.

4 Routine Maintenance Activities

Routine maintenance activities are based on the results of the routine inspections, as well as the anticipated life of certain components. The majority of the components will need to be repaired or replaced depending upon the condition (i.e., overall integrity, alignment/buckling, loss of material, structural damage, corrosion cracks, chemical deterioration, pitting, wear, settlement, etc.) and severity of issues observed during inspections.

Table 2-1 lists the features/components of the DMMF, the key conditions that will be inspected, and the anticipated routine maintenance activities for the features/components. This list includes the features of the DMMF that are anticipated to be constructed; additional structures constructed to accommodate future Port use and expansion will need to be added to the list as necessary.

5 Future Development

In addition to providing a facility to manage sediments, the DMMF will provide immediate expansion to Port Milwaukee facilities by approximately 42 acres, with capacity for further expansion. These new Port facilities will be designed to accommodate the range of commercial shipping vessels found on the Great Lakes, including berthing for vessels greater than 1,000 feet in length. Further, the new facility may provide additional public access use opportunities along this portion of the Lake Michigan shoreline.

Future developments at the DMMF may include construction of buildings, loading pads, additional berth facilities, and rail lines. It is likely that significant construction will require the use of pile supported structures. Given the nature of the sediments to be placed in the DMMF, it will be imperative that future developments take into account the goals of the DMMF to prevent release of contaminants and/or contaminated sediments to the environment. Considerations for design and construction of structures to aid in the prevention of compromising the integrity of the structures placed on the DMMF, as well as the integrity of the DMMF structure itself, are discussed further in the sections below.

5.1 Contaminant Considerations

The types of contaminants in the dredged sediments placed in the DMMF should be documented in order to evaluate how they will affect any structures required to be anchored within the dredged sediment (i.e., corrosive). Portions of walls and foundations that are embedded in the ground are frequently composed of concrete and steel. If protection measures are not implemented, they may be prone to accelerated degradation under sustained chemical attack. Sealants may be used to provide some protection, often composed of ceramics, thermoplastics coatings, chemical-resistant mortars, or polymeric membranes (USEPA, 1993).

5.2 Consistency and Load Considerations

The consistency and load-bearing capacity of the dredged sediments should be considered when placing a structural load on top of the DMMF. The dredged material is expected to consist of primarily low-strength fine-grained material. Engineering and construction techniques are available that allow buildings to be constructed on lower quality foundation materials. When designing a building foundation for this type of surface, two issues that must be considered are the bearing capacity of the surface and the potential for long-term settlement. The bearing capacity describes a foundation's ability to support the loads applied to the ground surface by the placement of a structure. When designing a building foundation, a geotechnical engineer estimates the foundation's bearing capacity based on the properties of the underlying soil and designs a suitable foundation (USEPA, 2014).

While bearing capacity addresses a near-term evaluation of whether the surface can support the weight of a building, a longer-term and more problematic issue relates to settlement. Settlement due to additional loading on top of this type of material can impact the foundation of buildings or other structures, as well as utility connections or other site features, and can damage the cover and create unsafe conditions at the surface of the DMMF. Structures must be designed to

accommodate settlement and monitored for the detrimental impacts of settlement (e.g., cracking, depressions) (USEPA, 2014). Additionally, settlement can be predicted for different loads over time based on the consistency of the dredged material placed. Consideration can also be made for handling the material during placement such that it will aid in stabilization.

5.3 Structural Design Considerations

As the site is developed in the future, each addition will require a reevaluation of the design assumptions for the DMMF, and potential impacts from future facilities. These assumptions may include but are not limited to:

- Surcharge assumptions for cellular cofferdams
- Bearing capacities of fill in cellular cofferdams
- Stability of cellular cofferdams with surcharge on dredged material
- Increase in external dredge depth and potential impact on cellular wall stability

Further it is anticipated that any future facility additions will require the use of pile supports. Those designs will require that piles not impact the stability of the cellular wall system, or compromise the DMMF in any way that may introduce contaminants into Lake Michigan.

6 Cost Considerations

Detailed estimates of the costs of long-term care and maintenance of the DMMF will best be developed following the receipt of relevant permits and selection of a construction contractor, as those events will better define the specific requirements. MMSD and Port Milwaukee are committed to meeting those requirements and providing the financial dedication to operating and maintaining the DMMF as described in the permits and their supporting plans.

7 References

American Society of Civil Engineers, 2015. ASCE Manuals and Reports on Engineering Practice No. 130 - *Waterfront Facilities Inspection and Assessment.* Prepared by the Waterfront Facility Inspection Committee of the Technical Committee on Ports and Harbors of the Coasts, Oceans, Ports, and Rivers Institute of the American Society of Civil Engineers.

Foth Infrastructure & Environment, LLC, 2020. *Final Design Report*. Prepared for WEC Business Services for the Milwaukee Estuary AOC Dredged Material Management Facility. November 16, 2020.

Foth Infrastructure & Environment, LLC, 2021a. *Facility Closure Plan*. April 23, 2021.

Foth Infrastructure & Environment, LLC, 2021b. *Construction Quality Assurance Plan*. April 23, 2021.

U.S. Environmental Protection Agency, 1993. *Geotechnical Systems for Structures on Contaminated Sites, A Technical Guidance*, EPA530-R-93-002. August 1993.

U.S. Environmental Protection Agency, 2014. *Closed Waste Sites as Community Assets: A Guide for Municipalities, Landfill Owners, and Regulators*, EPA/600/R-14/349. November 2014.

Wisconsin Department of Natural Resources, 2004. *The State of Wisconsin Approval Process for Dredging of Commercial Ports – Guidance for Applicants and WDNR Staff*, PUB-FH-061-2004. February 2004.

Wisconsin Department of Natural Resources, 2015. *Exempting Low Hazard Wastes from Solid Waste Regulations*, PUB-WA-1645. June 2015.

Tables

Table 2-1

Inspection and Maintenance Activities

Features/Components	Inspection Observation Activity	Potential Recommended Maintenance
Exterior and Containment		
Steel Sheet Piles	• Rust and overall integrity • Loss of material • Alignment/buckling • Containment	• Repair or replace dependent upon condition or severity of issue
Sealed Sheet Pile Interlocks	• Rust and overall integrity • Loss of material	• Repair or replace dependent upon condition or severity of issue
Anodes	• Condition (material loss/remaining)	• Replace as necessary, typically every 3-5 years but will be based on manufacturer's recommendation
Scour Protection	• Settlement, slumping • Slope Stability • Weathering of rip-rap	• Repair or replace rip rap dependent upon condition or severity of issue
Concrete Mattress	• Condition of concrete mattress	• Repair or replace dependent upon condition or severity of issue
Final Cover	• Wash out, rills • Settlement, slumping	• Repair as necessary to maintain the integrity of the final cover • Install erosion control measures (e.g., erosion matting) as needed
	• Wick drain integrity, condition, clogs	• Repair or replace dependent upon condition or severity of issue
Water Collection/Pumping and Treatment		
Weir Structure	• Rust and overall integrity	• Repair or replace dependent upon condition or severity of issue
Aggregate Trench	• Settlement, slumping	• Repair as necessary
Piping	• Clogging • Pipe breakage	• Clean out pipes regularly • Replace broken pipes
DMMF-DMDF Steel Sheet Pile And Rubble Mound Dike Connector	• Rust and overall integrity • Loss of material • Alignment/buckling • Containment	• Repair or replace dependent upon condition or severity of issue

Features/Components	Inspection Observation Activity	Potential Recommended Maintenance
Berthing Facilities/Platforms		
Concrete Platform	♦ Condition of concrete (structural damage, corrosion cracks, chemical deterioration, impact spalls)	♦ Repair or replace dependent upon condition or severity of issue
Steel Sheet Pile	♦ Rust and overall integrity ♦ Alignment/buckling ♦ Loss of material ♦ Containment	♦ Repair or replace dependent upon condition or severity of issue
Anodes	♦ Condition (material loss/remaining)	♦ Replace as necessary, typically every 3-5 years but will be based on manufacturer's recommendation
Fenders/Panels	♦ Condition (gouges, wear, tears, corrosion, cracking) ♦ Deformation ♦ Alignment/displacement ♦ Hardware (wear, distortion, corrosion, secure connection to structure) ♦ Chains (wear, distortion, corrosion, alignment with attachment point)	♦ Repair or replace dependent upon condition or severity of issue
Bollards	♦ Condition (corrosion, pitting, defects, damage) ♦ Structural displacement	♦ Repair or replace dependent upon condition or severity of issue
Mooring Dolphins	♦ Condition (corrosion, pitting, defects, damage) ♦ Structural displacement ♦ Hardware (wear, distortion, corrosion)	♦ Repair or replace dependent upon condition or severity of issue
Guard Railings	♦ Condition (wear, distortion, corrosion)	♦ Repair or replace dependent upon condition or severity of issue
Emergency Ladders	♦ Condition (wear, distortion, corrosion)	♦ Repair or replace dependent upon condition or severity of issue
Lighting	♦ Condition (broken, proper operation)	♦ Replace as necessary
Long-Term Water Treatment Facility		
	♦ Carbon condition ♦ Filter media condition ♦ General mechanical equipment condition	♦ Change out as necessary ♦ Change out as necessary ♦ Repair or replace dependent upon condition or severity of issue

Prepared by: TMK1
Checked by: SDG

Table 2-2

Post-Closure Inspection Log

Date(s) of Inspection: _____ Weather/Wind Conditions: _____

Inspection Items	Condition Assessment Rating	Element-Level Damage Rating (if necessary)	Comments (Location & Description)	Photograph I. D.	Describe Recommended Corrective Action
1. EXTERIOR & CONTAINMENT					
Water Elevation Staff Gauge					
Steel Sheet Piles (Cofferdam Structure)					
Sealed Sheet Pile Interlocks					
Sheet Pile Weir Boxes					
Existing Upland Steel Sheet Piles					
Anodes					
Scour Protection					
Concrete Mattress					
General Comments:					
2. FINAL COVER					
General Settlement					
Erosion					
Standing Water/Water Level					
General Comments:					
3. RELIEVING PLATFORM					
Concrete Platform					
Steel Sheet Pile					
Anodes					
Fenders/Panels/Hardware					
Bollards					
Dolphins					
Guard Railings					
Emergency Ladders					
General Comments:					

Inspection Items	Condition Assessment Rating	Element-Level Damage Rating (if necessary)	Comments (Location & Description)	Photograph I. D.	Describe Recommended Corrective Action
4. DMMF-DMDF STEEL SHEET PILE AND RUBBLE MOUND DIKE CONNECTOR					
Concrete Platform					
Steel Sheet Pile					
Anodes					
General Comments:					
5. OFFLOADING PLATFORM					
Concrete Platform					
Steel Sheet Pile					
Anodes					
Fenders/Panels/Hardware					
Bollards					
Mooring Dolphins					
General Comments:					
Other comments:					

Inspector Name (Print): _____

Inspector Name (Signature): _____

Figures

MILWAUKEE

MILWAUKEE RIVER

MILWAUKEE HARBOR

LAKE MICHIGAN

KINNICKINNIC RIVER

PROPOSED DMMF AREA

N

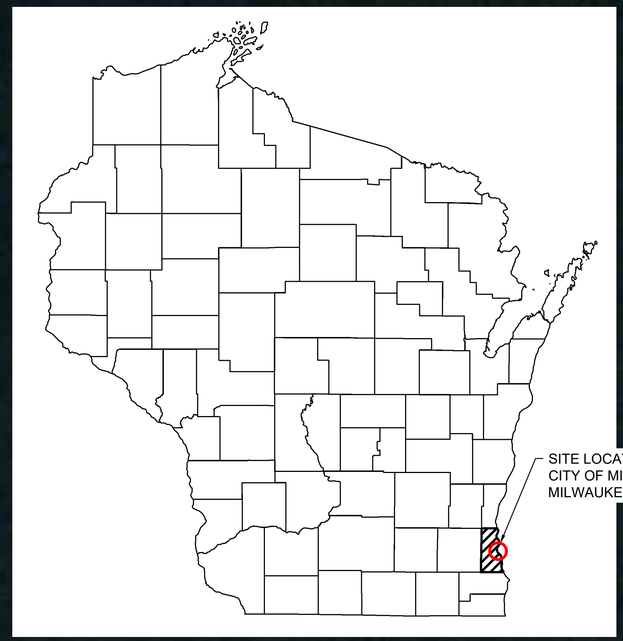

HORIZONTAL SCALE(FEET)
0 1000 2000

Foth

MILWAUKEE METROPOLITAN SEWERAGE DISTRICT (MMSD)

FIGURE 1
SITE LOCATION

LOW HAZARD EXEMPTION PERMIT
MILWAUKEE, WI

Date: 12/6/2019	Revision Date:	
Drawn By: JRS6	Checked By: TSW1	Project: 20M144

Appendix A

Final Design Drawings

FINAL DESIGN DRAWINGS FOR

MILWAUKEE ESTUARY DREDGED MATERIAL MANAGEMENT FACILITY

WEC ENERGY GROUP - BUSINESS SERVICES
MILWAUKEE, WISCONSIN
NOVEMBER 2020

VICINITY MAP

DRAWING LIST

ID	Sheet Number	Sheet Title
1	G01	COVER SHEET AND DRAWING LIST
2	G02	PROJECT NOTES - SHEET 1 OF 3
3	G03	PROJECT NOTES - SHEET 2 OF 3
4	G04	PROJECT NOTES - SHEET 3 OF 3
5	G05	EXISTING CONDITIONS
6	S01	BULKHEAD LAYOUT AND TIE-IN
7	S02	BULKHEAD PARTIAL LAYOUT C1 - C12
8	S03	BULKHEAD PARTIAL LAYOUT C13 - C23
9	S04	BULKHEAD PARTIAL LAYOUT C24 - C35
10	S05	BULKHEAD PARTIAL LAYOUT C36 - C47
11	S06	BULKHEAD PARTIAL LAYOUT C48 - C51
12	S07	BULKHEAD SECTION AT RELIEVING PLATFORM
13	S08	BULKHEAD SECTION AT DOLPHIN
14	S09	FENDER DETAILS
15	S10	BOLLARD DETAILS
16	S11	BULKHEAD AND UTILITY TRENCH DETAILS - SHEET 1 OF 3
17	S12	BULKHEAD AND UTILITY TRENCH DETAILS - SHEET 2 OF 3
18	S13	BULKHEAD AND UTILITY TRENCH DETAILS - SHEET 3 OF 3
19	S14	MISC. DETAILS
20	S15	EMERGENCY CELL LADDER DETAIL
21	S16	DECK AND DOLPHIN PLAN AND SECTIONS
22	S17	DECK AND DOLPHIN REINFORCING: SHEET 1 OF 2
23	S18	DECK AND DOLPHIN REINFORCING: SHEET 2 OF 2
24	S18A	CORNER PLATFORM PLAN AND SECTIONS
25	S19	OFFLOADING PLATFROM: SHEET 1 OF 5
26	S20	OFFLOADING PLATFROM: SHEET 2 OF 5
27	S21	OFFLOADING PLATFROM: SHEET 3 OF 5
28	S22	OFFLOADING PLATFROM: SHEET 4 OF 5
29	S23	OFFLOADING PLATFROM: SHEET 5 OF 5
30	S24	DMMF-DMDF CONNECTOR: SHEET 1 OF 3
31	S25	DMMF-DMDF CONNECTOR: SHEET 2 OF 3
32	S26	DMMF-DMDF CONNECTOR: SHEET 3 OF 3
33	S27	WATER CONTROL STURCTURES
34	S28	WEIR DETAIL AND SECTION

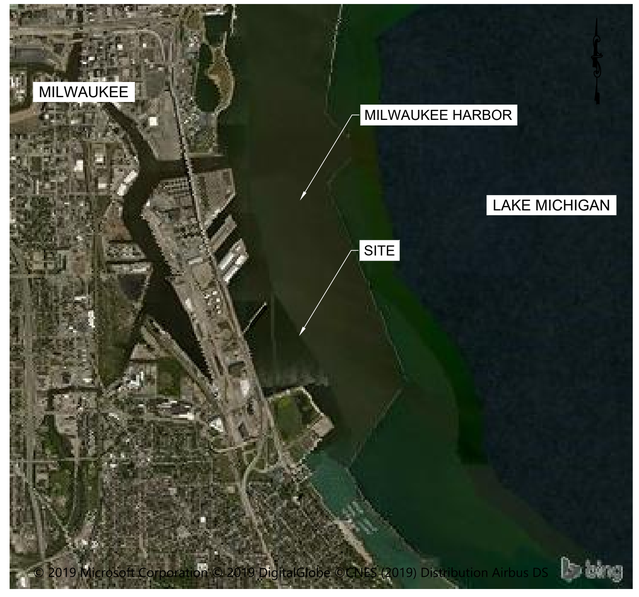

LOCATION MAP

NOT FOR CONSTRUCTION

FOTH INFRASTRUCTURE & ENVIRONMENT, LLC
2514 S 102ND ST
WEST ALLIS, WI 53227

THIS DOCUMENT MAY NOT BE USED WITHOUT THE WRITTEN APPROVAL OF FOTH INFRASTRUCTURE AND ENVIRONMENT, LLC. UNAPPROVED USE IS THE SOLE RESPONSIBILITY OF THE UNAUTHORIZED USER.

IT IS A VIOLATION OF LAW FOR ANY PERSON TO ALTER THIS DOCUMENT UNLESS ACTING UNDER THE DIRECTION OF A LICENSED PROFESSIONAL ENGINEER.

THIS DRAWING WAS PREPARED AT THE GRAPHIC SCALE INDICATED. INACCURACIES IN THE STATED SCALE MAY BE INTRODUCED WHEN DRAWINGS ARE REPRODUCED BY ANY MEANS.

WEC ENERGY GROUP - BUSINESS SERVICES
MILWAUKEE, WISCONSIN

MILWAUKEE ESTUARY DREDGED MATERIAL MANAGEMENT FACILITY

REVISIONS

NO.	BY	DATE	DESCRIPTION
1		-	
2		-	
3		-	
4		-	
5		-	
6		-	
7		-	

DATE OF PREPARATION

	BY	DATE
SURVEYED	-	-
DRAWN	MXS6 / JRS6	11/05/2020
DESIGNED	MXS6	11/05/2020
CHECKED	TSW1	11/08/2020

COVER SHEET AND DRAWING LIST

PROJECT NO: 0019W012

SHEET NUMBER
G01

WISCONSIN
TIMOTHY S. WAGNER
E-44137-6
MINNEAPOLIS
MN
PROFESSIONAL ENGINEER
11-11-2020

TIM WAGNER, P.E.
LEAD ENGINEER
FOTH INFRASTRUCTURE & ENVIRONMENT, LLC

Tuesday, May 07, 2019 7:51 AM

GENERAL NOTES:

1. SOIL PROPERTIES ARE BASED ON THE SITE-SPECIFIC GEOTECHNICAL INVESTIGATION PERFORMED BY FOTH IN JUNE 2020.

2. HORIZONTAL DATUM: WISCONSIN STATE PLANE SOUTH, NSRS 2011, US FOOT.

3. VERTICAL DATUM:
   3.1. LWD, WHICH IS 577.5 ABOVE IGLD85.
   3.2. IGLD85 IS 0.7' ABOVE IGLD55.
   3.3. NAVD88 IS 0.51' ABOVE IGLD85.

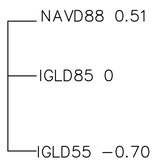

PROJECT DATUM CONVERSIONS

4. CUT-OFF FOR SHEET PILES IS 2' BELOW FINISHED PAVING GRADE, EXCEPT
   4.1. FOR THOSE THAT FALL BELOW THE CONCRETE PLATFORM, WHICH ARE TO BE CUT-OFF FLUSH WITH THE LOWER ELEVATION OF THE PLATFORM.
   4.2. FOR FRONT SHEETS THAT ARE IN CONTACT WITH WATER, WHICH ARE TO BE CUT-OFF AT EL. +12.5 FT LWD.
   4.3. FOR THE BACK SHEETS THAT ARE IN CONTACT WITH DISPOSED DREDGED MATERIAL, WHICH ARE TO BE CUT-OFF AT EL. +12.0 FT LWD.

5. CELLS ARE DESIGNED BASED ON APPLICABLE LOADING SHOWN BELOW, AND DESIGN DEPTHS OF −27 FT LWD (INCLUDING OVER DREDGE) AS INDICATED ON PLANS.

6. OFFLOADING PLATFORM AND DMMF-DMDF CONNECTOR ARE DESIGNED FOR THE EXISTING MUDLINE ELEVATION. NO DREDGING IS ACCEPTED NEAR THESE STRUCTURES.

7. PLATFORM IS DESIGNED BASED ON APPLICABLE LOADING SHOWN ON G04.

8. SHOP DRAWINGS SHALL SHOW IN DETAIL ALL SIZES, SHAPES, MATERIALS, FINISHES AND METHODS OF ATTACHING MISCELLANEOUS METAL ITEMS TO ONE ANOTHER, AND WORK OF OTHER TRADES.

9. ALL ELEVATIONS ARE REFERENCED TO LWD.

10. TOP OF THE BULKHEAD AT +12.0 FT LWD AS SHOWN ON THE SECTION DRAWINGS.

11. LANDSIDE OF THE CELL (HALF OF THE CELL TOWARD DMMF) WILL BE SEALED BY EITHER WELDED JOINTS OR APPROVED JOINT SEALER AS DESCRIBED IN THE PROJECT SPECIFICATIONS.

12. ALL MATERIALS TO MEET FEDERAL "BUY AMERICAN" REQUIREMENTS, AS DESCRIBED IN THE CONTRACT DOCUMENTS.

CONSTRUCTION SEQUENCE

1. LOCATE COORDINATES OF CELL CENTERS.

2. PERFORM EXPLORATORY PROBING AT 15' INCREMENT ALONG THE CELLS AND ARCS AS PER SPECS TO IDENTIFY POSSIBLE OBSTRUCTIONS. FOR THE FIRST 9 CELLS, ONE ADDITIONAL PROBING TO BE PERFORMED NEAR THE CENTER OF THE CELL. LOG THE CONDITION FOUND AND PROVIDE THOSE TO ENGINEER WITH THE GPS COORDINATES OF EACH PROBE.

3. STRIP ALL UNSUITABLE MATERIAL / OBSTRUCTIONS & DISPOSE OF AS CALLED FOR IN SPECIFICATIONS.

4. FOR CELLULAR COFFERDAMS, SHEET PILES ARE TO BE HANDLED, INSTALLED AND FILLED IN GENERAL CONFORMANCE TO ARCELORMITTAL "DESIGN & EXECUTION MANUAL, AS500 STRAIGHT WEB SHEET PILES". CELLULAR COFFERDAMS CAN BE INSTALLED IN ANY SEQUENCE.

5. GENERAL INSTALLATION PROCEDURE FOR CELLS ARE:
   5.1. INSTALLATION OF TEMPLATE AND SUPPORTING PILES.
   5.2. TEMPORARY POSITIONING OF TOP/LOWER TEMPLATE AS HIGH/LOW AS POSSIBLE ABOVE/BELOW WATER LEVEL.
   5.3. POSITIONING OF FOUR OR MORE ISOLATED SHEET PILES (USUALLY THE SPECIAL JUNCTION PILES).
   5.4. VERIFICATION OF VERTICALITY, THEN FIXING BY TACK WELDING TO UPPER TEMPLATE.
   5.5. THREADING OF ADJACENT SHEET PILES.
   5.6. CLOSING OF CELLS BETWEEN SPECIAL JUNCTION PILES.
   5.7. THREADING OF ARC PILES.
   5.8. DRIVING OF FLAT SHEET PILES USING STAGGERED DRIVING METHOD AFTER CLOSING THE CELL.
   5.9. LOWERING OF UPPER TEMPLATE AND DRIVING OF PILES TO DESIGN LEVEL.
   5.10. FILLING OF THE CELL.
   5.11. RAISING/REMOVAL OF TEMPLATE AT APPROPRIATE TIMES.
   5.12. BACKFILLING AND COMPACTING TO THE TOP OF THE CELL.
   5.13. EXTRACTION OF SUPPORTING PILES.

6. EXCAVATE/DREDGE UNSUITABLE/SOFT MATERIAL FOR THE FIRST 9 CELLS (I.E. CELL NO. 1 TO 9) AND THEIR CORRESPONDING ARCS THAT FALL UNDER THE PLATFORM. EXCAVATION DEPTH VARIES WITH LOCATION AND WILL BE FINALIZED DURING CONSTRUCTION USING COMBINED EXISTING GEOTECH AND COMPLIMENTARY PROBING.

7. FILL INSIDE OF CELLS IS TO BE VIBRO COMPACTED IN ACCORDANCE WITH SPECIFICATIONS.

8. FILL AND COMPACT TOP 2 FEET OF ALL CELLS, BEYOND RELIEVING PLATFORM FOOTPRINT, WITH CRUSHED ROCK.

9. COMPLETE FILL AND CONSTRUCT RELIEVING PLATFORM, CONNECTING PLATFORM, TIE-INS, DOLPHINS & OFFLOADING PLATFORM.

OFFLOADING PLATFORM
CONSTRUCTION SEQUENCE AND NOTES:

1. LOCATE CORNERS OF OFFLOADING PLATFORM.

2. POSITIVELY LOCATE ANY UTILITIES AND ANY POSSIBLE CONFLICTS BEFORE BEGINNING WORK.

3. CHECK THE NEW SHEETING LINE FOR POSSIBLE OBSTRUCTIONS USING A VIBRATORY PROBE.

4. REMOVE OBSTRUCTIONS AS NECESSARY USING WIRE ROPE OR CHAIN, PILE EXTRACTOR SLEEVE OR CLAMSHELL. THE SELECTED METHOD SHALL BE THE MOST PRACTICAL FOR REMOVAL OF THE ANTICIPATED OBSTRUCTION, AND THE LEAST DISRUPTIVE TO THE DREDGE LINE. OBSTRUCTIONS SHALL BE DISPOSED AT A REGULATED FACILITY.

5. FABRICATE THE STRUCTURAL BRACING FRAME AS SHOWN ON THE DRAWINGS.

6. DRIVE TEMPORARY FALSEWORK PILES AND SET BRACING FRAME TO FACILITATE SHEET PILE DRIVING.

7. DRIVE NEW STEEL SHEETING ALONG THE PERIMETER OF THE BRACE FRAME ALIGNMENT TO THE BOTTOM ELEVATION SHOWN ON THE DRAWINGS. SEE SECTION S20-1 ON DRAWING S20.

8. SECURE THE BRACE FRAME TO THE SHEETING AT ELEV. 7.0.

9. SECURE CLOSURE BETWEEN THE EXISTING FILTER CELL SHEETING AND OFFLOADING PLATFORM SHEETING. CLOSURE DETAIL TO BE DETERMINED IN THE FIELD AFTER OFFLOADING PLATFORM SHEETING IS INSTALLED AND SECURED.

10. DRIVE THE PIPE PILE BOLLARDS TO THE BOTTOM ELEV. SHOWN IN SECTION S22-2 ON DRAWING S22.

11. SECURE PIPE PILE BOLLARDS TO FACILITATE BACKFILLING.

12. LOOSE DUMP CELL BACKFILL MATERIAL TO APPROXIMATELY 1 TO 2 FT ABOVE THE LAKE LEVEL AND COMPACT WITH VIBRATORY PLATE OR DRUM COMPACTORS UNTIL NO SETTLEMENT OF THE BACKFILL IS OBSERVED. PLACE THE REMAINING CELL BACKFILL IN 12 TO 18 INCH VERTICAL LIFTS AND COMPACT EACH LIFT UNTIL NO SETTLEMENT IS OBSERVED. CONTINUE CELL BACKFILL PLACEMENT TO ELEV. 10.

13. PLACE TYPE C STONE FILL BETWEEN THE EXISTING AND NEW SHEETING AS THE NEW CELL IS BACKFILLED. THE INCREMENTAL FILL LEVELS BETWEEN THE NEW AND EXISTING CELLS AND IN THE NEW CELL SHOULD APPROXIMATELY EQUAL AT ALL TIMES.

14. PLACE NON-WOVEN GEOTEXTILE FABRIC IN ACCORDANCE WITH MANUFACTURER GUIDELINES.

15. PLACE AND COMPACT CRUSHED STONE WEARING SURFACE MATERIAL IN 12 INCH THICK LIFTS, WET AND COMPACT UNTIL NO SURFACE DEFLECTION IS OBSERVED. STOP FILL PLACEMENT AT ELEV. 12.0.

16. CONSTRUCT THE MOORING DOLPHINS AT THE LOCATIONS AND PER THE DETAILS SHOWN ON THE DRAWINGS.

17. INSTALL RUBBER FENDERS ON THE SHEETING PER THE DETAILS.

PROTECTIVE COATING:

1. FRONT SHEET PILES (SEE DRAWINGS FOR LOCATION) SHALL BE COATED OB BOTH SIDES FROM TOP TO 5 FT BELOW DREDGED MUDLINE OR −32 FT LWD AT INSTALLATION.

2. PILES LOCATED OUTSIDE OF THE CELLS AND IN THE INTERIOR (AWAY FROM LAKE MICHIGAN) SIDE IN PLAN (SEE DRAWINGS) SHALL BE COATED FROM TOP TO 5 FT BELOW DREDGED MUDLINE OR −32 FT LWD AT INSTALLATION.

3. MATERIAL USED FOR FACTORY EPOXY COATING OF ALL SCHEDULED SURFACES SHALL BE BAR-RUST 235 MULTI-PURPOSE EPOXY COATING AS MANUFACTURED BY DEVOE COATINGS OR EQUIVALENT ACCEPTED BY THE ENGINEER.

4. FIELD TOUCH-UP COATING SHALL BE IDENTICAL TO FACTORY COATING AND APPLIED IN ACCORDANCE WITH THE MANUFACTURER'S REQUIREMENTS.

5. PROTECTIVE COATING TOP COAT SHALL BE BLACK.

6. SURFACES SHALL BE PREPARED IN STRICT ACCORDANCE WITH THE PROTECTIVE COATING SYSTEM MANUFACTURER'S WRITTEN INSTRUCTIONS.

7. THE PROTECTIVE COATING SHALL BE APPLIED IN STRICT ACCORDANCE WITH MANUFACTURER'S WRITTEN INSTRUCTIONS. COATING IS TO BE APPLIED IN TWO COATS TO ACHIEVE A MINIMUM OVERALL DRY FILM THICKNESS OF 15 MILS.

8. ALL IMPERFECTIONS IN THE COATING SHALL BE REMOVED OR REPAIRED AT THE CONTRACTORS EXPENSE PRIOR TO FINAL ACCEPTANCE OF THE WORK.

NOT FOR CONSTRUCTION

Foth
FOTH INFRASTRUCTURE & ENVIRONMENT, LLC
2514 S 102ND ST
WEST ALLIS, WI 53227

THIS DOCUMENT MAY NOT BE USED WITHOUT THE WRITTEN APPROVAL OF FOTH INFRASTRUCTURE AND ENVIRONMENT, LLC. UNAPPROVED USE IS THE SOLE RESPONSIBILITY OF THE UNAUTHORIZED USER.

IT IS A VIOLATION OF LAW FOR ANY PERSON TO ALTER THIS DOCUMENT UNLESS ACTING UNDER THE DIRECTION OF A LICENSED PROFESSIONAL ENGINEER.

THIS DRAWING WAS PREPARED AT THE GRAPHIC SCALE INDICATED. INACCURACIES IN THE STATED SCALE MAY BE INTRODUCED WHEN DRAWINGS ARE REPRODUCED BY ANY MEANS.

WEC ENERGY GROUP - BUSINESS SERVICES

MILWAUKEE, WISCONSIN

MILWAUKEE ESTUARY DREDGED MATERIAL MANAGEMENT FACILITY

REVISIONS			
NO	BY	DATE	DESCRIPTION

DATE OF PREPARATION

	BY	DATE
SURVEYED	-	-
DRAWN	MXS6	11/05/2020
DESIGNED	MXS6	11/05/2020
CHECKED	TSW1	11/08/2020

PROJECT NOTES - SHEET 1 OF 3

PROJECT NO: 0019W012

SHEET NUMBER

G02

Tuesday, May 07, 2019 7:51:01 AM

GENERAL MATERIAL SPECIFICATIONS

STEEL:

1. STRUCTURAL STEEL SHALL COMPLY WITH THE "STEEL CONSTRUCTION MANUAL" FIFTEENTH EDITION PUBLISHED BY THE AMERICAN INSTITUTE OF STEEL CONSTRUCTION.
2. MISCELLANEOUS STEEL OR STEEL NOT SPECIFIED OTHERWISE IS TO BE GRADE 50.
3. WELDING SHALL CONFORM TO THE 'STRUCTURAL WELDING CODE – STEEL', PUBLISHED BY THE AMERICAN WELDING SOCIETY (AWS D1.1). A WELDER CERTIFIED IN ACCORDANCE WITH AWS STANDARDS SHALL PERFORM WELDING.
4. WELDING ELECTRODES SHALL BE E70XX AND COMPLY WITH AWS A5.1 AND AWS A5.5 UNLESS NOTED OTHERWISE.
5. STRUCTURAL STEEL SHAPES, PIPE PILES, AND PLATES SHALL CONFORM TO ASTM A572, GRADE 50.
6. STEEL HARDWARE: ANCHOR AND CARRIAGE BOLTS: ASTM F 1554 GRADE 55 AND ASTM A307, HIGH STRENGTH STRUCTURAL BOLTS: ASTM F3125 GR. A325, W/ HEXAGONAL OR CARRIAGE HEADS NUTS: ASTM A563, WASHERS (EXCEPT AGAINST TIMBER): ASTM F436, WASHERS AGAINST TIMBER SHALL BE COMMON DOCK WASHERS.
7. STEEL HARDWARE ABOVE GRADE SHALL BE HOT DIPPED GALVANIZED IN ACCORDANCE WITH ASTM A153.
8. CONNECTIONS SHALL BE DESIGNED AND DETAILED BY THE STEEL FABRICATOR EXCEPT FOR THOSE SPECIFICALLY DETAILED IN THE CONTRACT DOCUMENTS.
9. STEEL SHEET PILES SHALL CONFORM TO THE REQUIREMENTS OF ASTM A572 AND SHALL BE ARBED PS31 OR EQUAL, MIN 60000 PSI GRADES AS NOTED, AND ARE TO BE FURNISHED UNCOATED AND COATED AS PER COATING SECTION. MINIMUM INTERLOCK STRENGTH OF 24 KIP/IN IS REQUIRED.
10. PILES CAPACITY & TOE ELEVATION TO BE CONFIRMED AT THE SITE USING PDA TEST. TIMING AND PROCEDURE TO BE CONFIRMED BY ENGINEER.
11. LADDERS OF ONE INCH DIAMETER STEEL RUNGS, OR LARGER, SHALL BE GALVANIZED AND SHALL BE PLACED AT INTERVALS OF NOT MORE THAN 100 FEET.

CONCRETE:

1. CONCRETE WORK SHALL CONFORM TO THE REQUIREMENTS OF ACI–318 'BUILDING CODE REQUIREMENTS FOR STRUCTURAL CONCRETE', AS ADOPTED BY THE AMERICAN CONCRETE INSTITUTE.
2. PLATFORM CONCRETE SHALL BE NORMAL WEIGHT WITH A MINIMUM COMPRESSIVE STRENGTH OF 5000 PSI AT 28 DAYS. PORTLAND CEMENT SHALL BE TYPE II. CONCRETE SHALL CONTAIN 6% (+/– 1.5%) ENTRAINED AIR AND HAVE A MAXIMUM WATER TO CEMENT RATIO OF 0.40.
3. CONCRETE MIX SHOULD BE DESIGNED AND TESTED BY CONTRACTOR AS TO DEVELOP THE REQUIRED COMPRESSIVE STRENGTH AND BE APPROVED BY ENGINEER BEFORE STARTING THE OPERATIONS.
4. OTHER CONCRETE SHALL BE NORMAL WEIGHT WITH MINIMUM COMPRESSIVE STRENGTH OF 4000 PSI AT 28 DAYS. PORTLAND CEMENT SHALL BE TYPE II. CONCRETE SHALL CONTAIN 6% (+/– 1.5%) ENTRAINED AIR AND HAVE A MAXIMUM WATER TO CEMENT RATIO OF 0.40.
5. USE ACCELERATORS/ADMIXTURES, AS NECESSARY, TO IMPROVE WORKABILITY AND REDUCE WATER/CEMENT RATIO TO CONTROL SHRINKAGE. SUBMIT PROPOSED CONCRETE MIX TO THE ENGINEER FOR REVIEW. NO WATER SHALL BE ADDED TO THE MIX AT THE JOB SITE.
6. CONCRETE SHALL BE CONTROLLED CONCRETE, MIXED AND PLACED IN THE PRESENCE OF THE APPROVED TESTING AGENCY.
7. CONSTRUCTION JOINTS AND EXPANSION JOINTS SHOWN ON THE DRAWINGS ARE MANDATORY. ADDITIONAL CONSTRUCTION JOINTS AND MODIFICATIONS AS REQUIRED TO EXECUTE THE CONSTRUCTION SHALL BE SUBMITTED TO THE ENGINEER FOR APPROVAL. CONSTRUCTION JOINT AS SHOWN IN THE DRAWINGS.
8. DO NOT PLACE CONCRETE UNTIL REINFORCEMENT AND EMBEDDED ITEMS HAVE BEEN APPROVED BY THE ENGINEER AND/OR THE APPROVED TESTING AGENCY (IF/WHEN DIRECTED). PROVIDE A MINIMUM OF 24 HOURS NOTIFICATION TO THE ENGINEER.
9. A MINIMUM OF 72 HOURS SHALL ELAPSE BETWEEN ADJACENT CONCRETE PLACEMENTS.

CATHODIC PROTECTION:

1. ALUMINUM ANODES FOR PASSIVE CATHODIC PROTECTION OF STEEL STRUCTURES IN MARINE ENVIRONMENTS SHALL PROVIDE INITIAL, MEAN, AND END OF LIFE CURRENT DENSITY OF 180 mA/m^2, 90 mA/m^2, and 120 mA/m^2, RESPECTIVELY.
2. ANODES SHALL BE INSTALLED BY AN EXPERIENCED CONTRACTOR, MINIMUM 5 YEARS OF EXPERIENCE, UNDER THE SUPERVISION OF A CORROSION SPECIALIST CERTIFIED BY NACE.
3. CATHODIC PROTECTION SYSTEM SHALL BE TESTED AFTER INSTALLATION. SUBMIT TEST RESULTS IN A REPORT TO THE ENGINEER FOR REVIEW AND ACCEPTANCE.
4. CONTRACTOR SHALL SUBMIT, FOR THE REVIEW OF THE ENGINEER, INSTALLER AND TESTER QUALIFICATIONS, NACE INTERNATIONAL CORROSION CERTIFICATIONS, METHODS, AND PROCEDURES FOR TESTING CORROSION CONTROL SYSTEM, INCLUDING DESCRIPTION OF INSTRUMENTS AND EQUIPMENT TO BE USED.
5. ANODES SHALL BE ROTOMETALS ALUMANODE AHC20 (2" X 4" X 24") OR EQUIVALENT ACCEPTED BY THE ENGINEER.
6. ANODES SHALL BE INSTALLED ON ALL FRONT PILES (2 PER PILE) OUTSIDE OF CELL AND ONE ON EVERY FOUR SHEET PILES FOR CELLS.

REINFORCEMENT:

1. REINFORCING STEEL SHALL CONFORM TO THE REQUIREMENTS OF ASTM A615 GRADE 60, OR 75 AS CALLED FOR.
2. DETAILING, FABRICATION, AND ERECTION OF REINFORCING STEEL SHALL BE EPOXY COATED IN ACCORDANCE WITH ASTM A775 AND CONFORM TO THE REQUIREMENTS OF ACI–318 AND ACI–315 'DETAILS AND DETAILING OF CONCRETE REINFORCEMENT'.
3. REINFORCEMENT SHALL CONFORM TO BUILDING CODE REQUIREMENTS FOR STRUCTURAL CONCRETE (ACI 318), ACI DETAILING MANUAL (SP–66), CRSI MANUAL OF STANDARD PRACTICE (MSP), AND THE STRUCTURAL WELDING CODE–REINFORCING STEEL (AWS D1.4), ELECTRODES TO BE E–8018.
4. WELDED WIRE FABRIC SHALL CONFORM TO ASTM A185
5. PROVIDE EPOXY COATED SUPPLEMENTAL BARS AND ACCESSORIES AS REQUIRED TO HOLD REINFORCEMENT SECURELY IN POSITION.
6. MINIMUM CONCRETE PROTECTIVE COVER, UNLESS NOTED OTHERWISE, SHALL BE AS FOLLOWS:
   6.1. CONCRETE EXPOSED TO WEATHER 3 INCHES
   6.2. CONCRETE AT ADJACENT POURS 2 INCHES
   6.3. CONCRETE PLACED AGAINST EARTH 3 INCHES
7. ALL CONTINUOUS REINFORCEMENT SHALL BE EXTENDED AROUND CORNERS AND LAPPED AT NECESSARY SPLICES OR HOOKED AT DISCONTINUOUS ENDS. USE STANDARD HOOKS UNLESS OTHERWISE INDICATED.
8. LAPS SHALL BE CLASS B TENSION LAP SPLICES, UNLESS NOTED OTHERWISE.
9. REINFORCEMENT SHALL BE CONTINUOUS THROUGH CONSTRUCTION JOINTS. PROVIDE MECHANICAL COUPLERS WHERE REQUIRED CONTINUOUS REINFORCEMENT EXCEEDS AVAILABLE LENGTHS.

NOT FOR CONSTRUCTION

Foth
FOTH INFRASTRUCTURE & ENVIRONMENT, LLC
2514 S 102ND ST
WEST ALLIS, WI 53227

THIS DOCUMENT MAY NOT BE USED WITHOUT THE WRITTEN APPROVAL OF FOTH INFRASTRUCTURE AND ENVIRONMENT, LLC. UNAPPROVED USE IS THE SOLE RESPONSIBILITY OF THE UNAUTHORIZED USER.

IT IS A VIOLATION OF LAW FOR ANY PERSON TO ALTER THIS DOCUMENT UNLESS ACTING UNDER THE DIRECTION OF A LICENSED PROFESSIONAL ENGINEER.

THIS DRAWING WAS PREPARED AT THE GRAPHIC SCALE INDICATED. INACCURACIES IN THE STATED SCALE MAY BE INTRODUCED WHEN DRAWINGS ARE REPRODUCED BY ANY MEANS.

WEC ENERGY GROUP - BUSINESS SERVICES
MILWAUKEE, WISCONSIN

MILWAUKEE ESTUARY DREDGED MATERIAL MANAGEMENT FACILITY

REVISIONS

NO.	BY	DATE	DESCRIPTION
1		-	
2		-	
3		-	
4		-	
5		-	
6		-	
7		-	

DATE OF PREPARATION

	BY	DATE
SURVEYED	-	-
DRAWN	MXS6	11/05/2020
DESIGNED	MXS6	11/05/2020
CHECKED	TSW1	11/08/2020

PROJECT NOTES - SHEET 2 OF 3

PROJECT NO: 0019W012

SHEET NUMBER
G03

Tuesday, May 07, 2019 7:51:47 AM

DESIGN LOADS:

1. SURCHARGE:
   1.1. 500 PSF ON THE YARD IMMEDIATELY BEHIND CELL UP TO 30 FEET.
   1.2. 1000 PSF ON THE YARD STARTING 30 FEET BEHIND THE CELLS.
   1.3. 500 PSF ON THE RELIEVING PLATFORM, DMMF–DMDF CONNECTOR PLATFORM, AND ON THE OFFLOADING PLATFORM, OUTSIDE OF THE PERMISSIBLE CRANE OPERATION AREA.
   1.4. 250 PSF ON THE CELLS WHERE THE RELIEVING PLATFORM DOES NOT occur.

2. SPACE BOLLARD AS SHOWN ON THE PLANS WITH 120 KIPS PULL OVER ANGLES SHOWN BELOW.

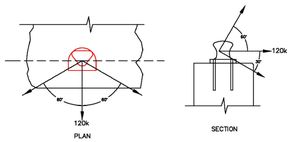

3. ICE LOAD:
   3.1. HORIZONTAL: 10 KIPS/FT AT EL 0.0' OR 2.0', EXCEPT PILES, WHICH IS 38 KIPS/FT AT EL –2.0' OR 0.0'.
   3.2. VERTICAL: 160 KIPS (UPWARD) AND 135 KIPS (DOWNWARD) ON PILES.

4. WAVE LOAD: 6.2 KIPS/FT APPLIED HORIZONTALLY AT EL 2.0' OR 4.0'.

5. BERTHING LOAD:
   5.1. ORE CARRIER: 16 KIPS/FT UNIFORM OVER 40 FEET IMPACT LENGTH.
   5.2. ALTERNATE CARRIER: 22 KIPS/FT UNIFORM OVER 30 FEET IMPACT LENGTH.

6. WATER LEVELS:
   6.1. HIGH WATER LEVEL: +5.0 FT LWD (582.5 FT IGLD85)
   6.2. LOW WATER LEVEL: 0.0 FT LWD (577.5 FT IGLD85)

7. EXCESS HYDROSTATIC PRESSURE
   7.1. AN EXCESS HYDROSTATIC PRESSURE OF 3 FT IS CONSIDERED IN DESIGN BETWEEN TWO SIDES OF THE CELLS.
   7.2. A PERMANENT DRAINAGE BEHIND CELLS SHALL BE CONSTRUCTED (NOT PART OF THIS CONTRACT) FOR REMOVING EXCESS WATER FROM THE BACK OF THE CELLS.

8. CRANE LOAD ON PILE SUPPORTED RELIEVING PLATFORM:
   8.1. TYPE: MANITOWOC 2250 SERIES 3, 200' BOOM, 35' RADIUS, 68K CAPACITY
   8.2. TREAD CONTACT WIDTH OF 47.3 INCHES.
   8.3. LOAD DISTRIBUTION AS SHOWN BELOW.

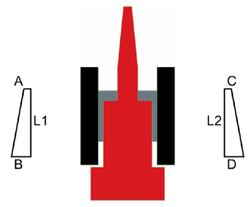

Boom Over Front or Rear

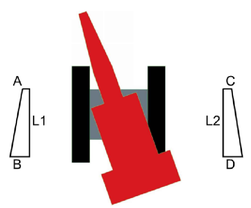

Boom at Critical 23 degree Swing

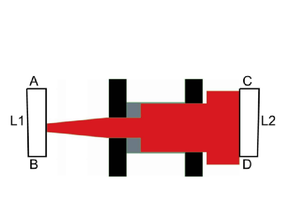

Boom Over Side

Center of Rotation to Fulcrum: 164.4375 inch		Center of Rotation to Fulcrum: 164.4375 inch	Center of Machine to Ctr of Crawlers: 132 inch
A	12.9 psi	11.9 psi	20.2 psi
B	35.9 psi	32.9 psi	18.2 psi
L1	328.9 inch	328.9 inch	328.9 inch
C	12.9 psi	15.9 psi	30.6 psi
D	35.9 psi	36.9 psi	28.6 psi
L2	328.9 inch	328.9 inch	328.9 inch

9. DMMF–DMDF CONNECTOR AND OFFLOADING PLATFORMS ARE DESIGNED FOR A 150 TON CRANE WITH 3000 PSF DISTRIBUTED ON FOLLOWING TRACKS.

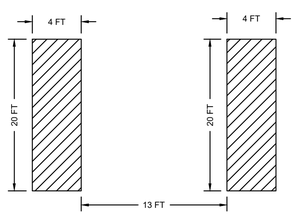

10. THE PILE DESIGN ALLOWABLE CAPACITY FOR RELIEVING PLATFORM PILES ARE AS FOLLOWS:
   10.1 AXIS A & C:
      10.1.1 COMPRESSION = 250 TONS
      10.1.2 UPLIFT = 100 TONS
      10.1.3 LATERAL = 10 TONS @ DECK CONNECTION
      10.1.4 TORSION = 10 KIP–FT @ DECK CONNECTION
   10.2 AXIS B:
      10.2.1 COMPRESSION = 300 TONS
      10.2.2 UPLIFT = 100 TONS
      10.2.3 LATERAL = 60 TONS @ DECK CONNECTION
      10.2.4 TORSION = 20 KIP–FT @ DECK CONNECTION

11. THE DESIGN ALLOWABLE CAPACITY FOR DOLPHIN PILES ARE AS FOLLOWS:
   11.1 AXIS C (FRONT):
      11.1.1 COMPRESSION = 100 TONS
      11.1.2 UPLIFT = 50 TONS
      11.1.3 LATERAL = 20 TONS @ DECK CONNECTION
      11.1.4 TORSION = 35 KIP–FT @ DECK CONNECTION
   11.2 AXIS B1 (BACK):
      11.2.1 COMPRESSION = 200 TONS
      11.2.2 UPLIFT = 100 TONS
      11.2.3 LATERAL = 60 TONS @ DECK CONNECTION
      11.2.4 TORSION = 70 KIP–FT @ DECK CONNECTION

NOT FOR CONSTRUCTION

Foth
FOTH INFRASTRUCTURE & ENVIRONMENT, LLC
2514 S 102ND ST
WEST ALLIS, WI 53227

THIS DOCUMENT MAY NOT BE USED WITHOUT THE WRITTEN APPROVAL OF FOTH INFRASTRUCTURE AND ENVIRONMENT, LLC. UNAPPROVED USE IS THE SOLE RESPONSIBILITY OF THE UNAUTHORIZED USER.

IT IS A VIOLATION OF LAW FOR ANY PERSON TO ALTER THIS DOCUMENT UNLESS ACTING UNDER THE DIRECTION OF A LICENSED PROFESSIONAL ENGINEER.

THIS DRAWING WAS PREPARED AT THE GRAPHIC SCALE INDICATED. INACCURACIES IN THE STATED SCALE MAY BE INTRODUCED WHEN DRAWINGS ARE REPRODUCED BY ANY MEANS.

WEC ENERGY GROUP - BUSINESS SERVICES

MILWAUKEE, WISCONSIN

MILWAUKEE ESTUARY DREDGED MATERIAL MANAGEMENT FACILITY

REVISIONS

NO.	BY	DESCRIPTION	DATE

DATE OF PREPARATION

	BY	DATE
SURVEYED	-	-
DRAWN	MXS6	11/05/2020
DESIGNED	MXS6	11/05/2020
CHECKED	TSW1	11/08/2020

PROJECT NOTES - SHEET 3 OF 3

PROJECT NO: 0019W012

SHEET NUMBER

G04

Tuesday, May 07, 2019 7:51:01 AM

N:377029.66'
E:2532420.58'

10.03'
10.10'
10.14'
10.16'
10.09'
10.11'
10.08'
10.11'
10.11'
10.12'
10.22'
10.31'
10.31'
10.31'
10.31'
10.13'
10.29'
12.23'

LIQUID CARGO PIER

BULKHEAD LINE AND ELEVATIONS

STORM WATER OUTFALL
(TO BE ABANDONED BY OTHERS)

N:375884.53'
E:2534655.66'

N:375017.80'
E:2533219.34'

FEDERAL CHANNEL

EXISTING DMDF

-28 -26 -24 -22 -20 -18 -16 -14 -12 -10 -8

LEGEND

10.29' — **BULKHEAD ELEVATION**

12.23' — **SPOT ELEVATION**

10' CONTOUR (FT BELOW LWD IGLD85)

2' CONTOUR (FT BELOW LWD IGLD85)

FEDERAL CHANNEL LIMITS

GENERAL NOTES

1. THIS PLAN IS CONCEPTUAL AND DOES NOT INCLUDE ANY SPECIFIC GEOTECHNICAL OR STRUCTURAL DESIGN. THE CONCEPTUAL SITE PLAN IS FOR PLANNING PURPOSES AND IS NOT INTENDED FOR CONSTRUCTION.
2. BASE PLAN IS COMPILED BY FOTH USING AVAILABLE GIS DATA AND INFORMATION PROVIDED BY PORT MILWAUKEE.
3. HYDROGRAPHIC SURVEY PERFORMED BY FRESHWATER ENGINEERING SEPTEMBER 18-19, 2019.
4. TOPOGRAPHIC SURVEY AND UFC LEVEL 1 VISUAL INSPECTION OF EXISTING SHEET PILE BULKHEAD PERFORMED BY FOTH SEPTEMBER 4, 2019

© 2020 Microsoft Corporation © 2019 DigitalGlobe ©CNES (2019) Distribution Airbus DS

NOT FOR CONSTRUCTION

Foth
FOTH INFRASTRUCTURE & ENVIRONMENT, LLC
2514 S 102ND ST
WEST ALLIS, WI 53227

THIS DOCUMENT MAY NOT BE USED WITHOUT THE WRITTEN APPROVAL OF FOTH INFRASTRUCTURE AND ENVIRONMENT, LLC. UNAPPROVED USE IS THE SOLE RESPONSIBILITY OF THE UNAUTHORIZED USER.

IT IS A VIOLATION OF LAW FOR ANY PERSON TO ALTER THIS DOCUMENT UNLESS ACTING UNDER THE DIRECTION OF A LICENSED PROFESSIONAL ENGINEER.

THIS DRAWING WAS PREPARED AT THE GRAPHIC SCALE INDICATED. INACCURACIES IN THE STATED SCALE MAY BE INTRODUCED WHEN DRAWINGS ARE REPRODUCED BY ANY MEANS.

WEC ENERGY GROUP - BUSINESS SERVICES
MILWAUKEE, WISCONSIN

MILWAUKEE ESTUARY DREDGED MATERIAL MANAGEMENT FACILITY

REVISIONS

NO.	BY	DATE	DESCRIPTION

DATE OF PREPARATION

	BY	DATE
SURVEYED	-	
DRAWN	JRS6 / MXS6	11/05/2020
DESIGNED	MXS6	11/05/2020
CHECKED	TSW1	11/08/2020

EXISTING CONDITIONS

HORIZONTAL SCALE(FEET)
0 150 300

PROJECT NO: 0019W012

SHEET NUMBER
G05

Tuesday, May 07, 2019 10:51:01 AM
Drawing Name: C:\Users\mxs6\Desktop\Milwaukee Estuary DMMF\Milwaukee Estuary DMMF_Existing Conditions.dwg

CELL/ARC CENTER POINTS		
POINT	EASTING	NORTHING
1	2531915.69	375663.78
1A	2531943.93	375679.96
1B	2531924.97	375694.97
2	2531953.21	375711.16
2a	2531981.44	375727.34
2b	2531962.49	375742.35
3	2531990.73	375758.53
3A	2532018.96	375774.72
3B	2532000.01	375789.73
4	2532028.24	375805.91
4a	2532056.48	375822.09
4b	2532037.52	375837.10
5	2532065.76	375853.29
5a	2532094.00	375869.47
5B	2532075.04	375884.48
6	2532103.28	375900.66
6a	2532131.52	375916.85
6b	2532112.56	375931.86
7	2532140.80	375948.04
7a	2532169.03	375964.22
7b	2532150.08	375979.23
8	2532178.31	375995.42
8a	2532206.55	376011.60
8b	2532187.60	376026.61
9	2532215.83	376042.79
9A	2532244.07	376058.98
9B	2532225.11	376073.99
10	2532253.35	376090.17
10a	2532281.59	376106.35
10b	2532262.63	376121.36
11	2532290.87	376137.55
11A	2532319.11	376153.73
11b	2532300.15	376168.74
12	2532328.39	376184.92
12a	2532356.62	376201.11
12b	2532337.67	376216.12
13	2532365.90	376232.30
13A	2532394.14	376248.48
13B	2532375.18	376263.50
14	2532403.42	376279.68
14a	2532431.66	376295.86
14B	2532412.70	376310.87
15	2532440.94	376327.06
15a	2532469.18	376343.24
15b	2532450.22	376358.25
16	2532478.46	376374.43
16A	2532506.69	376390.61
16b	2532487.74	376405.63
17	2532515.98	376421.81
17b	2532525.26	376453.00
18	2532553.49	376469.19
18b	2532576.87	376446.54
17A	2532546.00	376410.27
19	2532578.16	376414.02
19a	2532579.45	376381.50
19B	2532601.53	376391.36
20	2532602.82	376358.84
20a	2532604.11	376326.32
20B	2532623.54	376335.26
21	2532627.49	376303.67
21a	2532628.78	376271.15
21b	2532650.85	376281.02
22	2532652.14	376248.50
22a	2532653.45	376215.99
22b	2532675.52	376225.85
23	2532676.81	376193.33
23a	2532678.10	376160.81
23B	2532700.18	376170.68
24	2532701.47	376138.16
24a	2532702.77	376105.64
24B	2532724.85	376115.51
25	2532726.14	376082.99
25a	2532727.43	376050.47
25B	2532749.50	376060.33
26	2532750.79	376027.81
26a	2532752.10	375995.30
26B	2532774.17	376005.16
27	2532775.46	375972.64
27A	2532776.75	375940.12
27b	2532798.83	375949.99
28	2532800.12	375917.47
28A	2532801.42	375884.95
28B	2532823.50	375894.82
29	2532824.79	375862.30
29A	2532826.08	375829.78
29b	2532848.15	375839.64

CELL/ARC CENTER POINTS		
POINT	EASTING	NORTHING
30	2532849.44	375807.13
30A	2532850.75	375774.61
30B	2532872.82	375784.48
31	2532874.11	375751.96
31A	2532875.40	375719.44
31b	2532897.48	375729.30
32	2532898.77	375696.78
32A	2532900.07	375664.27
32B	2532922.15	375674.13
33	2532923.44	375641.61
33a	2532924.73	375609.09
33B	2532946.80	375618.96
34	2532948.09	375586.44
34a	2532949.40	375553.92
34b	2532971.47	375563.79
35	2532972.76	375531.27
35a	2532974.05	375498.75
35B	2532996.13	375508.61
36	2532997.42	375476.09
36a	2532998.72	375443.58
36b	2533020.80	375453.45
37	2533022.09	375420.93
37a	2533023.38	375388.41
37b	2533045.45	375398.27
38	2533046.74	375365.75
38A	2533048.04	375333.24
38B	2533070.12	375343.10
39	2533071.41	375310.58
39a	2533072.70	375278.06
39b	2533094.78	375287.93
40	2533096.07	375255.41
40a	2533097.37	375222.89
40B	2533119.45	375232.76
41	2533120.74	375200.24
41A	2533122.03	375167.72
41b	2533144.10	375177.58
42	2533145.39	375145.06
42A	2533146.69	375112.55
42b	2533168.77	375122.42
43	2533170.06	375089.90
43A	2533171.35	375057.38
43b	2533193.43	375067.24
44	2533194.72	375034.72
44a	2533196.02	375002.21
44B	2533218.10	375012.07
45	2533219.39	374979.55
45a	2533220.67	374947.03
45b	2533242.75	374956.90
46	2533244.04	374924.38
46A	2533245.34	374891.86
46b	2533267.42	374901.73
47	2533268.71	374869.21
47A	2533270.00	374836.69
47b	2533292.08	374846.55
48	2533293.37	374814.03
48A	2533294.67	374781.52
48b	2533316.74	374791.39
49	2533318.03	374758.87
49a	2533319.32	374726.35
49b	2533341.40	374736.21
50	2533342.69	374703.69
50A	2533343.99	374671.18
50b	2533366.07	374681.04
51	2533367.36	374648.52

NOTES:
1. ALL CONTOURS SHOWN ARE EXISTING GRADES.
2. SEE SHEET G02, G03, & G04 FOR GENERAL NOTES.
3. ALL CELLS AND ARCS ARE TO BE FIELD LOCATED BASED ON THEIR CENTER LOCATION GIVEN IN THE TABLE ON THIS SHEET.

© 2020 Microsoft Corporation © 2020 Maxar ©CNES (2020) Distribution Airbus DS

NOT FOR CONSTRUCTION

Foth
FOTH INFRASTRUCTURE & ENVIRONMENT, LLC
2514 S 102ND ST
WEST ALLIS, WI 53227

THIS DOCUMENT MAY NOT BE USED WITHOUT THE WRITTEN APPROVAL OF FOTH INFRASTRUCTURE AND ENVIRONMENT, LLC. UNAPPROVED USE IS THE SOLE RESPONSIBILITY OF THE UNAUTHORIZED USER.

IT IS A VIOLATION OF LAW FOR ANY PERSON TO ALTER THIS DOCUMENT UNLESS ACTING UNDER THE DIRECTION OF A LICENSED PROFESSIONAL ENGINEER.

THIS DRAWING WAS PREPARED AT THE GRAPHIC SCALE INDICATED. INACCURACIES IN THE STATED SCALE MAY BE INTRODUCED WHEN DRAWINGS ARE REPRODUCED BY ANY MEANS.

WEC ENERGY GROUP - BUSINESS SERVICES
MILWAUKEE, WISCONSIN

MILWAUKEE ESTUARY DREDGED MATERIAL MANAGEMENT FACILITY

REVISIONS			
NO.	DESCRIPTION	BY	DATE

DATE OF PREPARATION

	BY	DATE
SURVEYED	-	-
DRAWN	MXS6 / JRS6	11/05/2020
DESIGNED	MXS6	11/05/2020
CHECKED	TSW1	11/08/2020

BULKHEAD LAYOUT AND TIE-IN

HORIZONTAL SCALE(FEET)
0 150 300

PROJECT NO: 0019W012

SHEET NUMBER
S01

Tuesday, May 07, 2019 7:51 AM
U:\pw_work\pw_data_prod\d0029\d0[illegible] - d0[illegible]\sheet layout and tie in.dwg

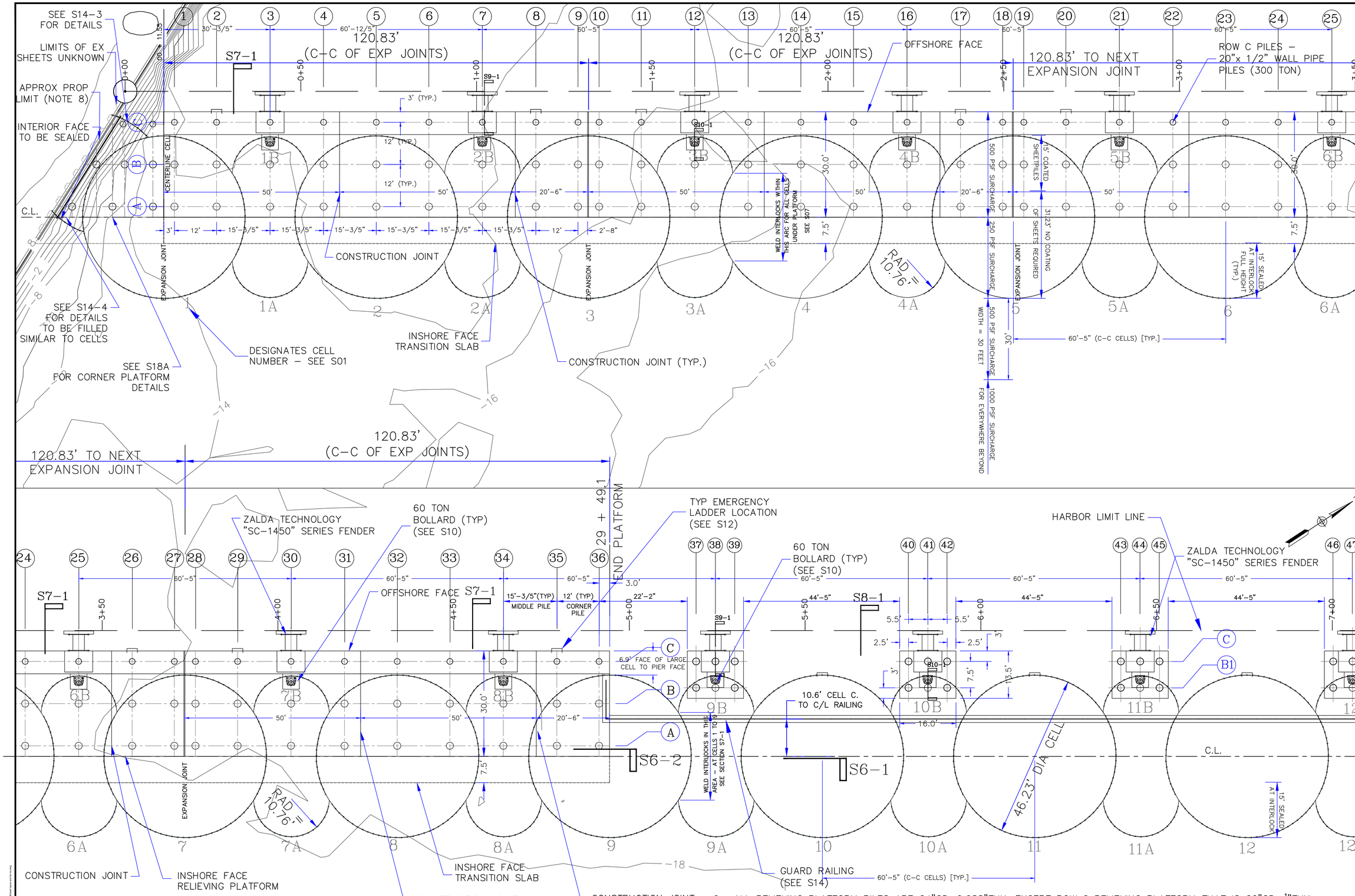

NOTES:
1. ALL CONTOURS SHOWN ARE EXISTING GRADES.
2. SEE SHEET G02, G03, & G04 FOR GENERAL NOTES.
3. ALL CELLS AND ARCS ARE TO BE FIELD LOCATED BASED ON THEIR CENTER LOCATION GIVEN IN THE TABLE ON SHEET S01.
4. SEE S16 - S18 FOR DOLPHIN REINFORCING.
5. THERE ARE FOUR TYPICAL RELIEVING PLATFORMS WITH CORNER PILE SPACING OF 12' AND MIDDLE PILE SPACING OF 15'-1½".
6. ALL RELIEVING PLATFORM PILES ARE 24"OD-0.688"THK, EXCEPT ROW C RELIEVING PLATFORM THAT IS 20"OD-½"THK.
7. ROW B1 DOLPHIN PILES ARE 32"OD-0.688"THK, ROW C DOLPHIN PILES ARE 24"OD-0.688"THK.
8. CONTRACTOR TO CONFIRM PROPERTY LIMIT PRIOR TO CONSTRUCTION TO AVOID ENCROACHMENT.
9. IN ALL DRAWINGS FLAT SHEET PILES ARE ONLY FOR PICTORIAL PURPOSES. NOT ALL INDIVIDUAL SHEETS ARE SHOWN. CONTRACTOR TO DEVELOP SHEET PILE LAYOUT AS PER INFORMATION GIVEN AND PROVIDE TO ENGINEER FOR APPROVAL.

NOT FOR CONSTRUCTION

Foth
FOTH INFRASTRUCTURE & ENVIRONMENT, LLC
2514 S 102ND ST
WEST ALLIS, WI 53227

THIS DOCUMENT MAY NOT BE USED WITHOUT THE WRITTEN APPROVAL OF FOTH INFRASTRUCTURE AND ENVIRONMENT, LLC. UNAPPROVED USE IS THE SOLE RESPONSIBILITY OF THE UNAUTHORIZED USER.

IT IS A VIOLATION OF LAW FOR ANY PERSON TO ALTER THIS DOCUMENT UNLESS ACTING UNDER THE DIRECTION OF A LICENSED PROFESSIONAL ENGINEER.

THIS DRAWING WAS PREPARED AT THE GRAPHIC SCALE INDICATED. INACCURACIES IN THE STATED SCALE MAY BE INTRODUCED WHEN DRAWINGS ARE REPRODUCED BY ANY MEANS.

WEC ENERGY GROUP - BUSINESS SERVICES
MILWAUKEE, WISCONSIN

MILWAUKEE ESTUARY DREDGED MATERIAL MANAGEMENT FACILITY

REVISIONS

NO.	BY	DATE	DESCRIPTION

DATE OF PREPARATION

	BY	DATE
SURVEYED	-	-
DRAWN	MXS6 / JRS6	11/05/2020
DESIGNED	MXS6	11/05/2020
CHECKED	TSW1	11/08/2020

BULKHEAD PARTIAL LAYOUT C1 - C12

HORIZONTAL SCALE(FEET)
0 12 24

PROJECT NO: 0019W012

SHEET NUMBER
S02

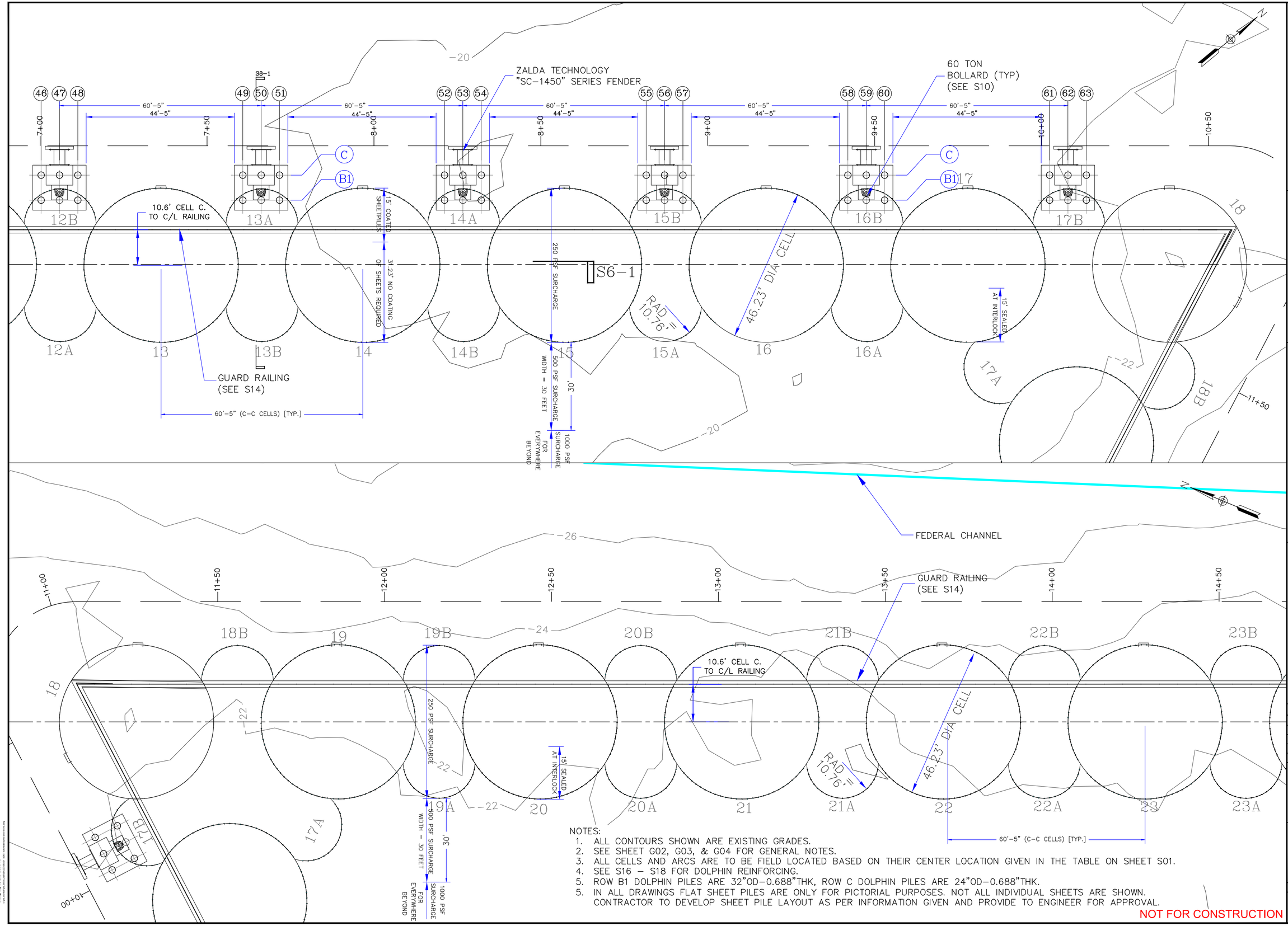

NOTES:

1. ALL CONTOURS SHOWN ARE EXISTING GRADES.
2. SEE SHEET G02, G03, & G04 FOR GENERAL NOTES.
3. ALL CELLS AND ARCS ARE TO BE FIELD LOCATED BASED ON THEIR CENTER LOCATION GIVEN IN THE TABLE ON SHEET S01.
4. SEE S16 – S18 FOR DOLPHIN REINFORCING.
5. ROW B1 DOLPHIN PILES ARE 32"OD–0.688"THK, ROW C DOLPHIN PILES ARE 24"OD–0.688"THK.
5. IN ALL DRAWINGS FLAT SHEET PILES ARE ONLY FOR PICTORIAL PURPOSES. NOT ALL INDIVIDUAL SHEETS ARE SHOWN. CONTRACTOR TO DEVELOP SHEET PILE LAYOUT AS PER INFORMATION GIVEN AND PROVIDE TO ENGINEER FOR APPROVAL.

NOT FOR CONSTRUCTION

Foth
FOTH INFRASTRUCTURE & ENVIRONMENT, LLC
2514 S 102ND ST
WEST ALLIS, WI 53227

THIS DOCUMENT MAY NOT BE USED WITHOUT THE WRITTEN APPROVAL OF FOTH INFRASTRUCTURE AND ENVIRONMENT, LLC. UNAPPROVED USE IS THE SOLE RESPONSIBILITY OF THE UNAUTHORIZED USER.

IT IS A VIOLATION OF LAW FOR ANY PERSON TO ALTER THIS DOCUMENT UNLESS ACTING UNDER THE DIRECTION OF A LICENSED PROFESSIONAL ENGINEER.

THIS DRAWING WAS PREPARED AT THE GRAPHIC SCALE INDICATED. INACCURACIES IN THE STATED SCALE MAY BE INTRODUCED WHEN DRAWINGS ARE REPRODUCED BY ANY MEANS.

WEC ENERGY GROUP - BUSINESS SERVICES

MILWAUKEE, WISCONSIN

MILWAUKEE ESTUARY DREDGED MATERIAL MANAGEMENT FACILITY

REVISIONS			
NO.	BY	DATE	DESCRIPTION

DATE OF PREPARATION

	BY	DATE
SURVEYED	-	-
DRAWN	MXS6 / JRS6	11/05/2020
DESIGNED	MXS6	11/05/2020
CHECKED	TSW1	11/08/2020

BULKHEAD PARTIAL LAYOUT C13 - C23

HORIZONTAL SCALE(FEET)
0 12 24

PROJECT NO: 0019W012

SHEET NUMBER
S03

Tuesday, May 07, 2019 7:55:25 AM

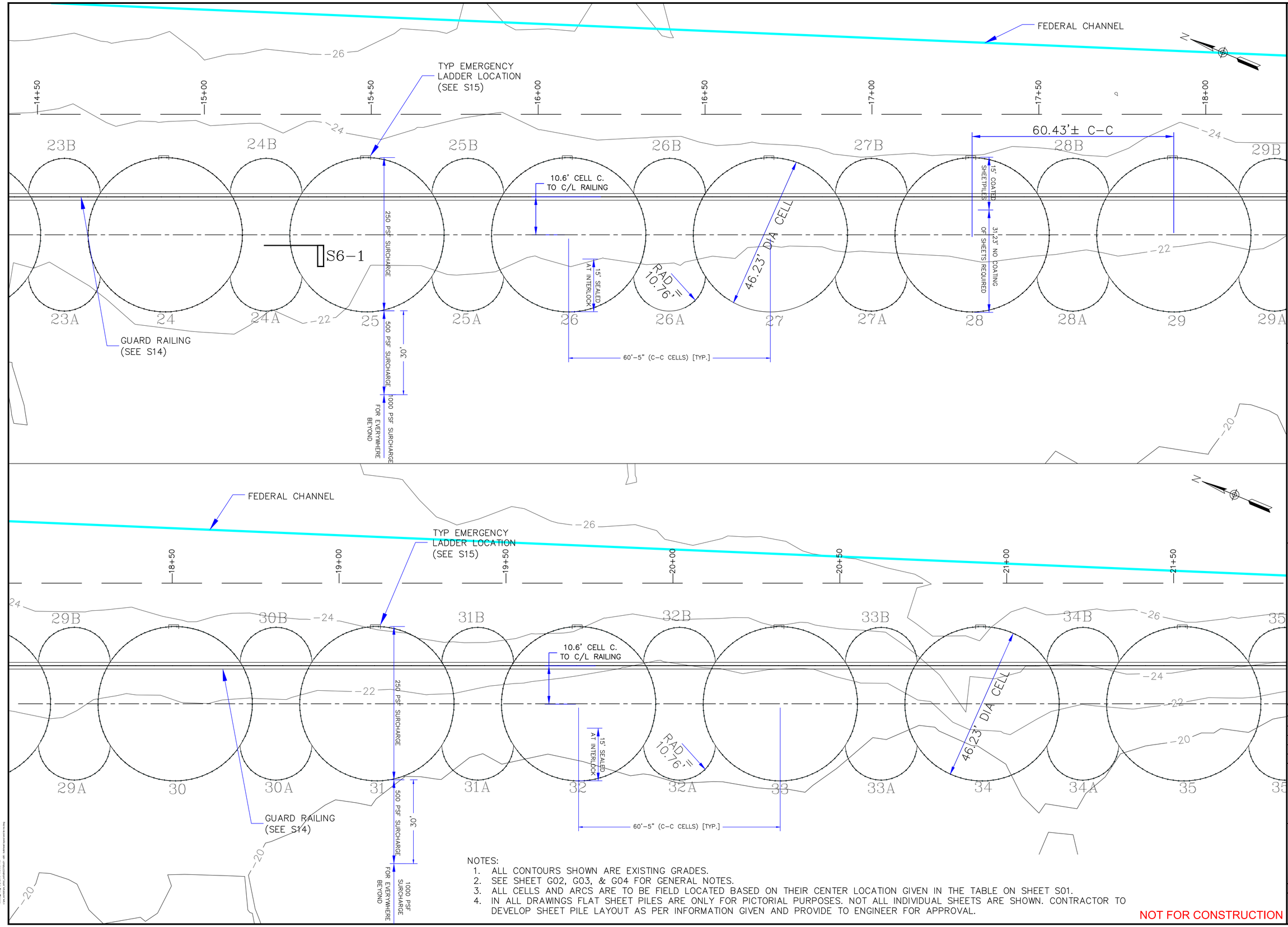

NOTES:

1. ALL CONTOURS SHOWN ARE EXISTING GRADES.
2. SEE SHEET G02, G03, & G04 FOR GENERAL NOTES.
3. ALL CELLS AND ARCS ARE TO BE FIELD LOCATED BASED ON THEIR CENTER LOCATION GIVEN IN THE TABLE ON SHEET S01.
4. IN ALL DRAWINGS FLAT SHEET PILES ARE ONLY FOR PICTORIAL PURPOSES. NOT ALL INDIVIDUAL SHEETS ARE SHOWN. CONTRACTOR TO DEVELOP SHEET PILE LAYOUT AS PER INFORMATION GIVEN AND PROVIDE TO ENGINEER FOR APPROVAL.

NOT FOR CONSTRUCTION

Foth
FOTH INFRASTRUCTURE & ENVIRONMENT, LLC
2514 S 102ND ST
WEST ALLIS, WI 53227

THIS DOCUMENT MAY NOT BE USED WITHOUT THE WRITTEN APPROVAL OF FOTH INFRASTRUCTURE AND ENVIRONMENT, LLC. UNAPPROVED USE IS THE SOLE RESPONSIBILITY OF THE UNAUTHORIZED USER.

IT IS A VIOLATION OF LAW FOR ANY PERSON TO ALTER THIS DOCUMENT UNLESS ACTING UNDER THE DIRECTION OF A LICENSED PROFESSIONAL ENGINEER.

THIS DRAWING WAS PREPARED AT THE GRAPHIC SCALE INDICATED. INACCURACIES IN THE STATED SCALE MAY BE INTRODUCED WHEN DRAWINGS ARE REPRODUCED BY ANY MEANS.

WEC ENERGY GROUP - BUSINESS SERVICES

MILWAUKEE, WISCONSIN

MILWAUKEE ESTUARY DREDGED MATERIAL MANAGEMENT FACILITY

REVISIONS

NO.	BY	DATE	DESCRIPTION
1		-	
2		-	
3		-	
4		-	
5		-	
6		-	
7		-	

DATE OF PREPARATION

	BY	DATE
SURVEYED	-	-
DRAWN	MXS6 / JRS6	11/05/2020
DESIGNED	MXS6	11/05/2020
CHECKED	TSW1	11/08/2020

BULKHEAD PARTIAL LAYOUT C24 - C35

HORIZONTAL SCALE(FEET)
0 12 24

PROJECT NO: 0019W012

SHEET NUMBER
S04

Tuesday, Nov 03, 2020 9:30:01 AM

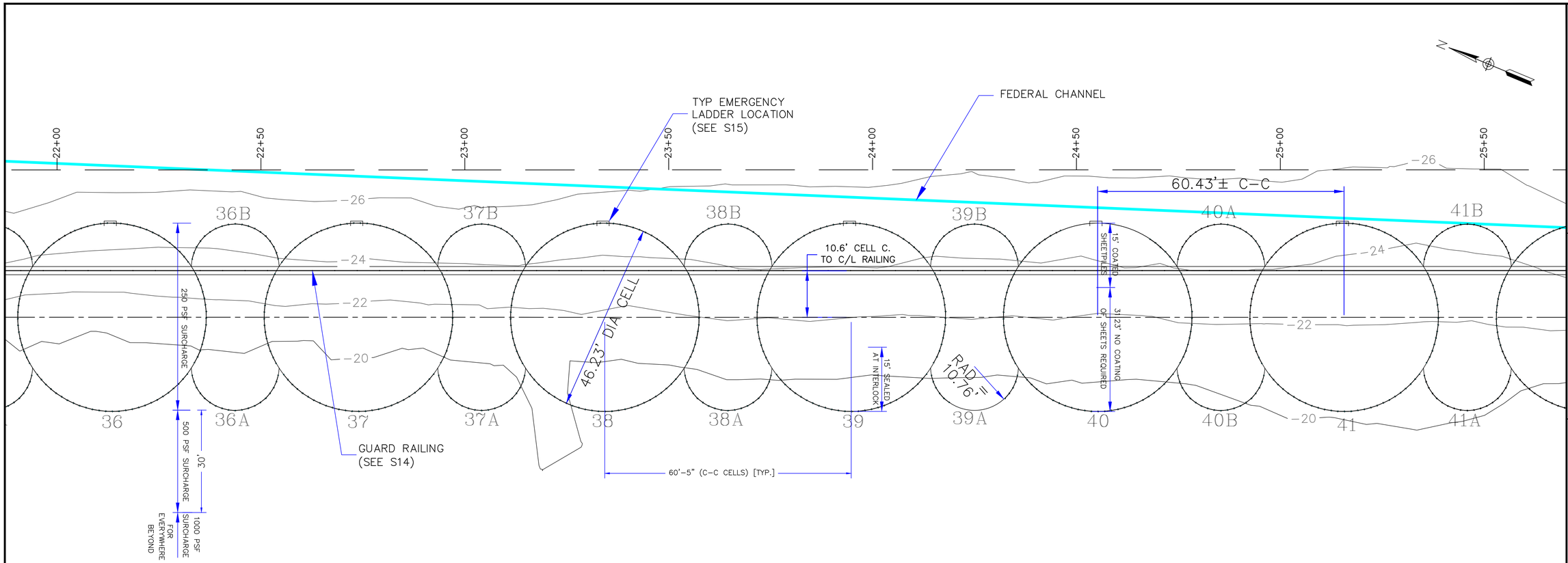

NOTES:

1. ALL CONTOURS SHOWN ARE EXISTING GRADES.
2. SEE SHEET G02, G03, & G04 FOR GENERAL NOTES.
3. ALL CELLS AND ARCS ARE TO BE FIELD LOCATED BASED ON THEIR CENTER LOCATION GIVEN IN THE TABLE ON SHEET S01.
4. IN ALL DRAWINGS FLAT SHEET PILES ARE ONLY FOR PICTORIAL PURPOSES. NOT ALL INDIVIDUAL SHEETS ARE SHOWN. CONTRACTOR TO DEVELOP SHEET PILE LAYOUT AS PER INFORMATION GIVEN AND PROVIDE TO ENGINEER FOR APPROVAL.

NOT FOR CONSTRUCTION

Foth
FOTH INFRASTRUCTURE & ENVIRONMENT, LLC
2514 S 102ND ST
WEST ALLIS, WI 53227

THIS DOCUMENT MAY NOT BE USED WITHOUT THE WRITTEN APPROVAL OF FOTH INFRASTRUCTURE AND ENVIRONMENT, LLC. UNAPPROVED USE IS THE SOLE RESPONSIBILITY OF THE UNAUTHORIZED USER.

IT IS A VIOLATION OF LAW FOR ANY PERSON TO ALTER THIS DOCUMENT UNLESS ACTING UNDER THE DIRECTION OF A LICENSED PROFESSIONAL ENGINEER.

THIS DRAWING WAS PREPARED AT THE GRAPHIC SCALE INDICATED. INACCURACIES IN THE STATED SCALE MAY BE INTRODUCED WHEN DRAWINGS ARE REPRODUCED BY ANY MEANS.

WEC ENERGY GROUP - BUSINESS SERVICES
MILWAUKEE, WISCONSIN

MILWAUKEE ESTUARY DREDGED MATERIAL MANAGEMENT FACILITY

REVISIONS

NO.	BY	DESCRIPTION	DATE
1			-
2			-
3			-
4			-
5			-
6			-
7			-

DATE OF PREPARATION

	BY	DATE
SURVEYED	-	-
DRAWN	MXS6 / JRS6	11/05/2020
DESIGNED	MXS6	11/05/2020
CHECKED	TSW1	11/08/2020

BULKHEAD PARTIAL LAYOUT C36 - C47

HORIZONTAL SCALE(FEET)
0 12 24

PROJECT NO: 0019W012

SHEET NUMBER
S05

Tuesday, May 05, 2020 08:05:05 AM
Plotted by: jschmidt on Autodesk Docs://0019W012 Bulkhead Partial Layout.rvt

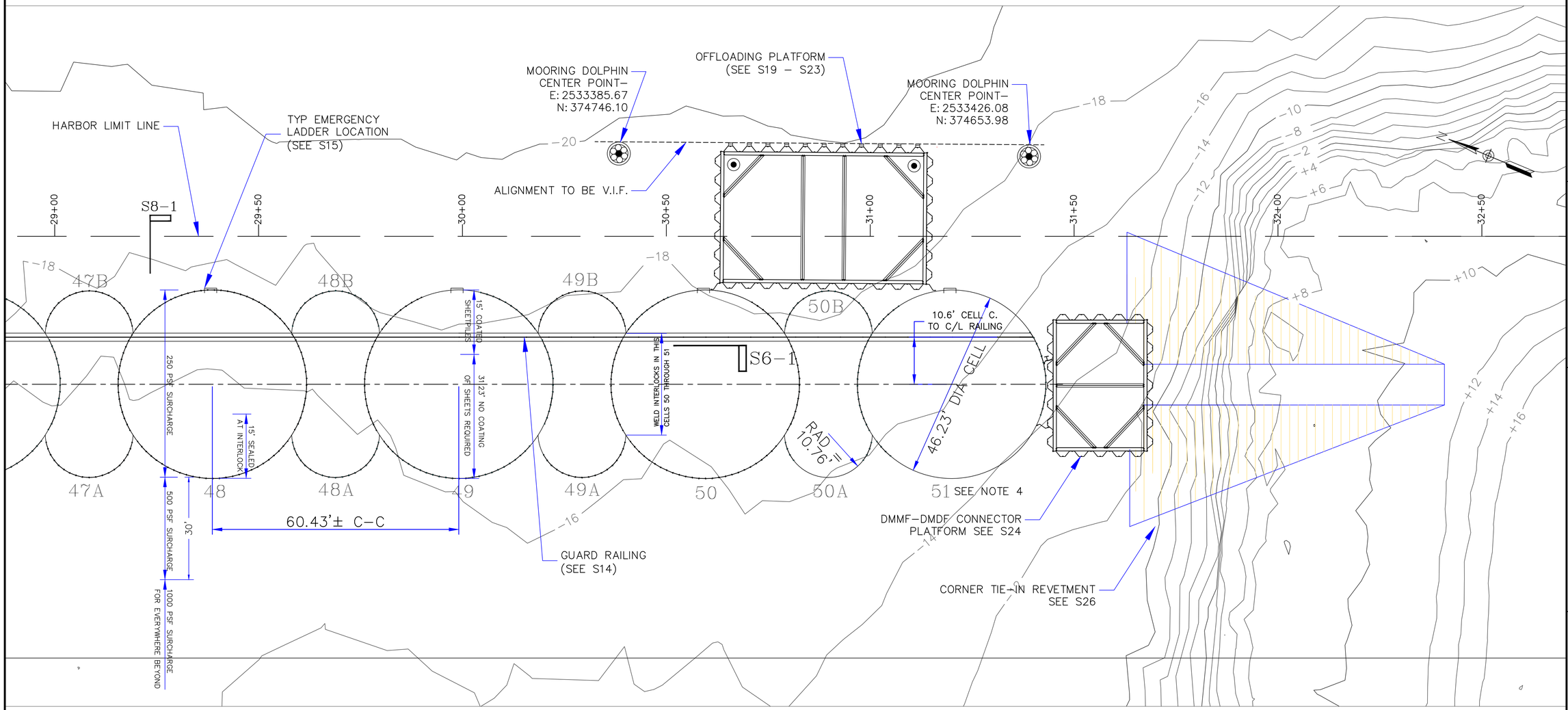

NOTES:

1. ALL BATHMETRY CONTOURS SHOWN ARE EXISTING GRADES.
2. SEE SHEET G02, G03, & G04 FOR GENERAL NOTES.
3. ALL CELLS AND ARCS ARE TO BE FIELD LOCATED BASED ON THEIR CENTER LOCATION GIVEN IN THE TABLE ON SHEET S01.
4. CELL 51 SHEETS TO BE COATED FROM LAKE SIDE TO 30 FT BACK BOTH SIDES FROM TOP TO 5 FT BELOW DESIGN DREDGED MUDLINE.
5. IN ALL DRAWINGS FLAT SHEET PILES ARE ONLY FOR PICTORIAL PURPOSES. NOT ALL INDIVIDUAL SHEETS ARE SHOWN. CONTRACTOR TO DEVELOP SHEET PILE LAYOUT AS PER INFORMATION GIVEN AND PROVIDE TO ENGINEER FOR APPROVAL.

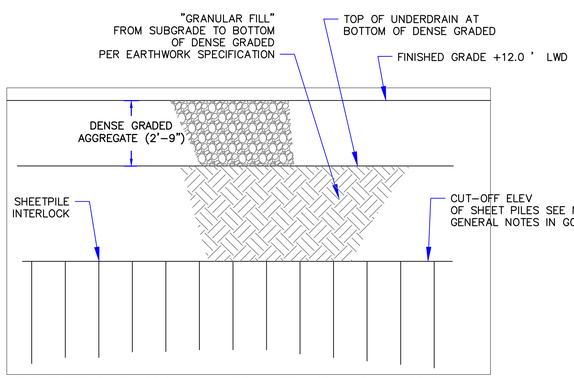

SECTION S6–1 PAVING ON CELL

SCALE 1"=3'–6" SECTION AT LANDWARD EDGE OF CELL

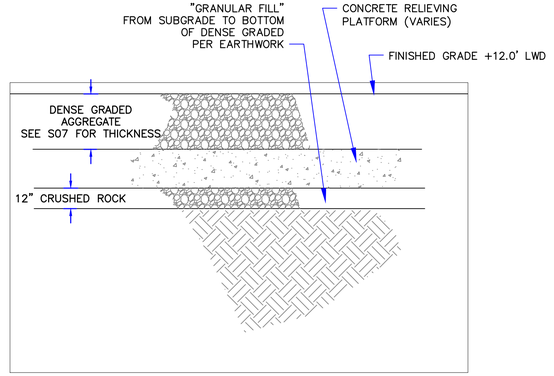

SECTION S6–2 PAVING ON PLATFORM

SCALE 1"=3'–6" SECTION UNDER PLATFORM (CONDITIONS VARY)

NOT FOR CONSTRUCTION

Foth
FOTH INFRASTRUCTURE & ENVIRONMENT, LLC
2514 S 102ND ST
WEST ALLIS, WI 53227

THIS DOCUMENT MAY NOT BE USED WITHOUT THE WRITTEN APPROVAL OF FOTH INFRASTRUCTURE AND ENVIRONMENT, LLC. UNAPPROVED USE IS THE SOLE RESPONSIBILITY OF THE UNAUTHORIZED USER.

IT IS A VIOLATION OF LAW FOR ANY PERSON TO ALTER THIS DOCUMENT UNLESS ACTING UNDER THE DIRECTION OF A LICENSED PROFESSIONAL ENGINEER.

THIS DRAWING WAS PREPARED AT THE GRAPHIC SCALE INDICATED. INACCURACIES IN THE STATED SCALE MAY BE INTRODUCED WHEN DRAWINGS ARE REPRODUCED BY ANY MEANS.

WEC ENERGY GROUP
BUSINESS SERVICES
MILWAUKEE, WISCONSIN

MILWAUKEE ESTUARY DREDGED MATERIAL MANAGEMENT FACILITY

REVISIONS			
NO.	BY	DATE	DESCRIPTION

DATE OF PREPARATION

	BY	DATE
SURVEYED	-	-
DRAWN	MXS6 / JRS6	11/05/2020
DESIGNED	MXS6	11/05/2020
CHECKED	TSW1	11/08/2020

BULKHEAD PARTIAL LAYOUT C48 - C51

HORIZONTAL SCALE(FEET)
0 12 24

PROJECT NO: 0019W012

SHEET NUMBER
S06

Tuesday, May 07, 2019 7:59:05 AM

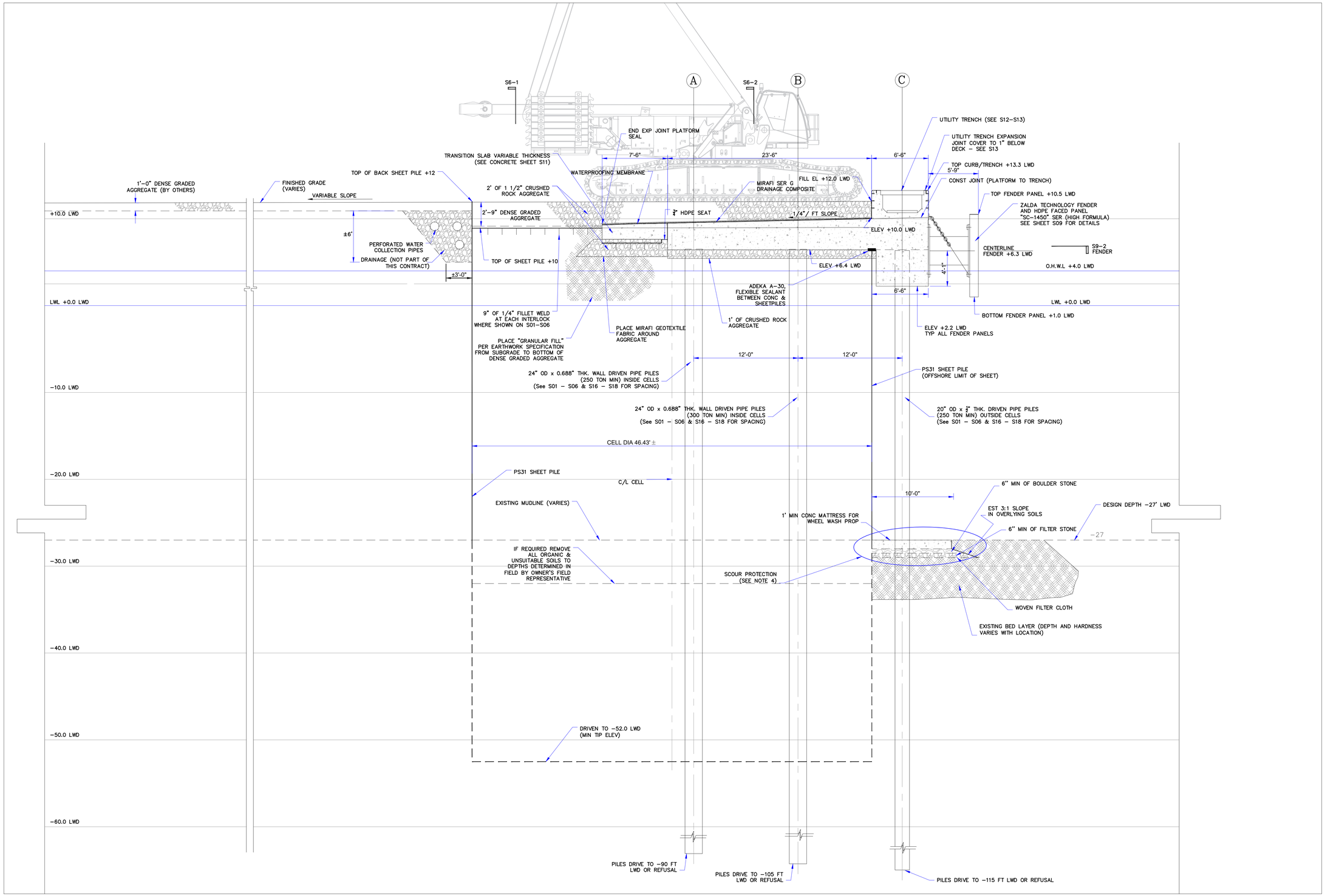

SECTION S7-1
TYPICAL STEEL CELL & RELIEVING PLATFORM SECTION

SCALE 1" = 5'-0"

NOTES:

1. SEE SHEET G01 THRU G04 FOR GENERAL NOTES.
2. SEE SHEET S16 THRU S18 FOR REINFORCING.
3. PIPE PILE CAPACITIES ARE ALLOWABLE DESIGN VALUES.
4. CONTRACTOR TO PROVIDE A SCOUR PROTECTION DESIGN FOR ENGINEER REVIEW.

NOT FOR CONSTRUCTION

Foth
FOTH INFRASTRUCTURE & ENVIRONMENT, LLC
2514 S 102ND ST
WEST ALLIS, WI 53227

THIS DOCUMENT MAY NOT BE USED WITHOUT THE WRITTEN APPROVAL OF FOTH INFRASTRUCTURE AND ENVIRONMENT, LLC. UNAPPROVED USE IS THE SOLE RESPONSIBILITY OF THE UNAUTHORIZED USER.

IT IS A VIOLATION OF LAW FOR ANY PERSON TO ALTER THIS DOCUMENT UNLESS ACTING UNDER THE DIRECTION OF A LICENSED PROFESSIONAL ENGINEER.

THIS DRAWING WAS PREPARED AT THE GRAPHIC SCALE INDICATED. INACCURACIES IN THE STATED SCALE MAY BE INTRODUCED WHEN DRAWINGS ARE REPRODUCED BY ANY MEANS.

WEC ENERGY GROUP - BUSINESS SERVICES

MILWAUKEE, WISCONSIN

MILWAUKEE ESTUARY DREDGED MATERIAL MANAGEMENT FACILITY

REVISIONS			
NO.	BY	DATE	DESCRIPTION

DATE OF PREPARATION

	BY	DATE
SURVEYED	-	-
DRAWN	MXS6	11/05/2020
DESIGNED	MXS6	11/05/2020
CHECKED	TSW1	11/08/2020

BULKHEAD SECTION AT RELIEVING PLATFORM

GRAPHIC SCALE

SCALE:

AS NOTED

PROJECT NO: 0019W012

SHEET NUMBER

S07

Tuesday, May 07, 2019 10:31 AM
c:\tw_workdir\tsw_8764_{e6f2d0237d0d4f1c8d4ea4ca6dcbc3ea}.dwg

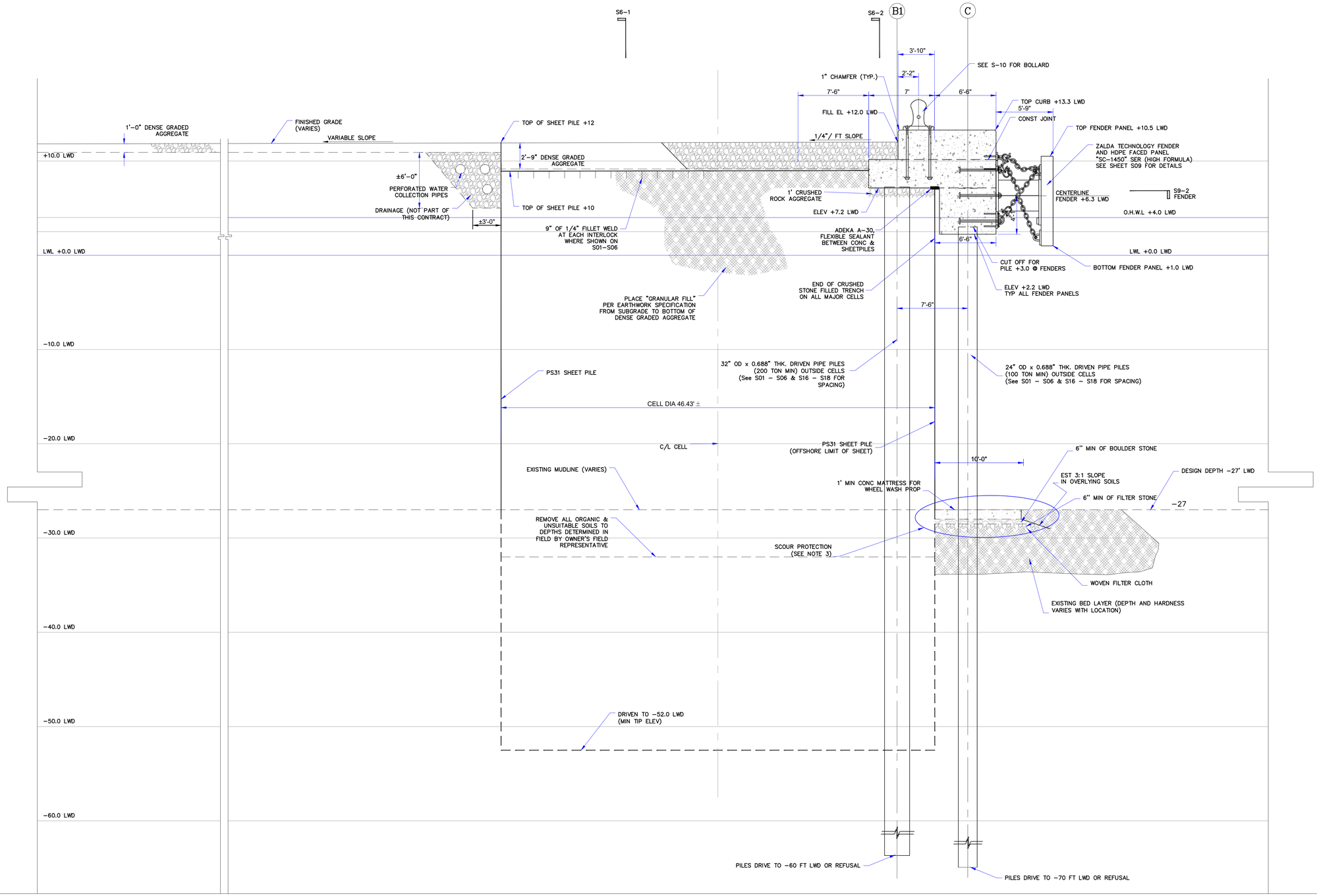

SECTION S8-1
TYPICAL STEEL CELL & DOLPHIN SECTION

SCALE 1" = 5'-0"

NOTES:

1. SEE SHEET G01 THRU G04 FOR GENERAL NOTES
2. SEE SHEET S16 THRU S18 FOR REINFORCING
3. CONTRACTOR TO PROVIDE A SCOUR PROTECTION DESIGN FOR ENGINEER REVIEW.

NOT FOR CONSTRUCTION

Foth
FOTH INFRASTRUCTURE & ENVIRONMENT, LLC
2514 S 102ND ST
WEST ALLIS, WI 53227

THIS DOCUMENT MAY NOT BE USED WITHOUT THE WRITTEN APPROVAL OF FOTH INFRASTRUCTURE AND ENVIRONMENT, LLC. UNAPPROVED USE IS THE SOLE RESPONSIBILITY OF THE UNAUTHORIZED USER.

IT IS A VIOLATION OF LAW FOR ANY PERSON TO ALTER THIS DOCUMENT UNLESS ACTING UNDER THE DIRECTION OF A LICENSED PROFESSIONAL ENGINEER.

THIS DRAWING WAS PREPARED AT THE GRAPHIC SCALE INDICATED. INACCURACIES IN THE STATED SCALE MAY BE INTRODUCED WHEN DRAWINGS ARE REPRODUCED BY ANY MEANS.

WEC ENERGY GROUP - BUSINESS SERVICES

MILWAUKEE, WISCONSIN

MILWAUKEE ESTUARY DREDGED MATERIAL MANAGEMENT FACILITY

REVISIONS

NO.	BY	DESCRIPTION	DATE
1			-
2			-
3			-
4			-
5			-
6			-
7			-
8			-

DATE OF PREPARATION

	BY	DATE
SURVEYED	-	-
DRAWN	MXS6	11/05/2020
DESIGNED	MXS6	11/05/2020
CHECKED	TSW1	11/08/2020

BULKHEAD SECTION AT DOLPHIN

GRAPHIC SCALE

SCALE:

AS NOTED

PROJECT NO: 0019W012

SHEET NUMBER

S08

Tuesday, May 07, 2019 10:01 AM
c:\tw_workdir\tsw_default_ca0d2a0025f5f0e8\clipdata-sandbox.dwg

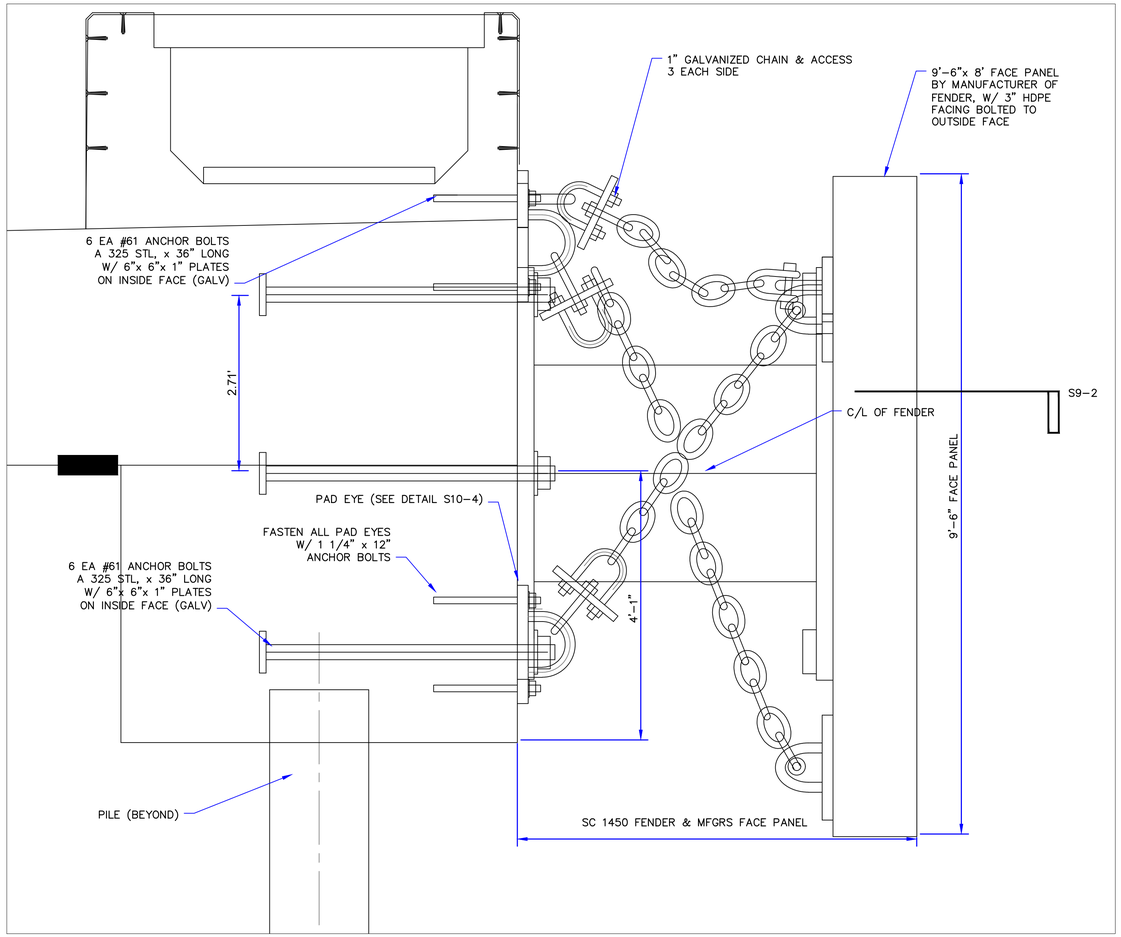

SECTION S9-1
TYP SHIP BERTH FENDER
SCALE 1" = 1'-1"

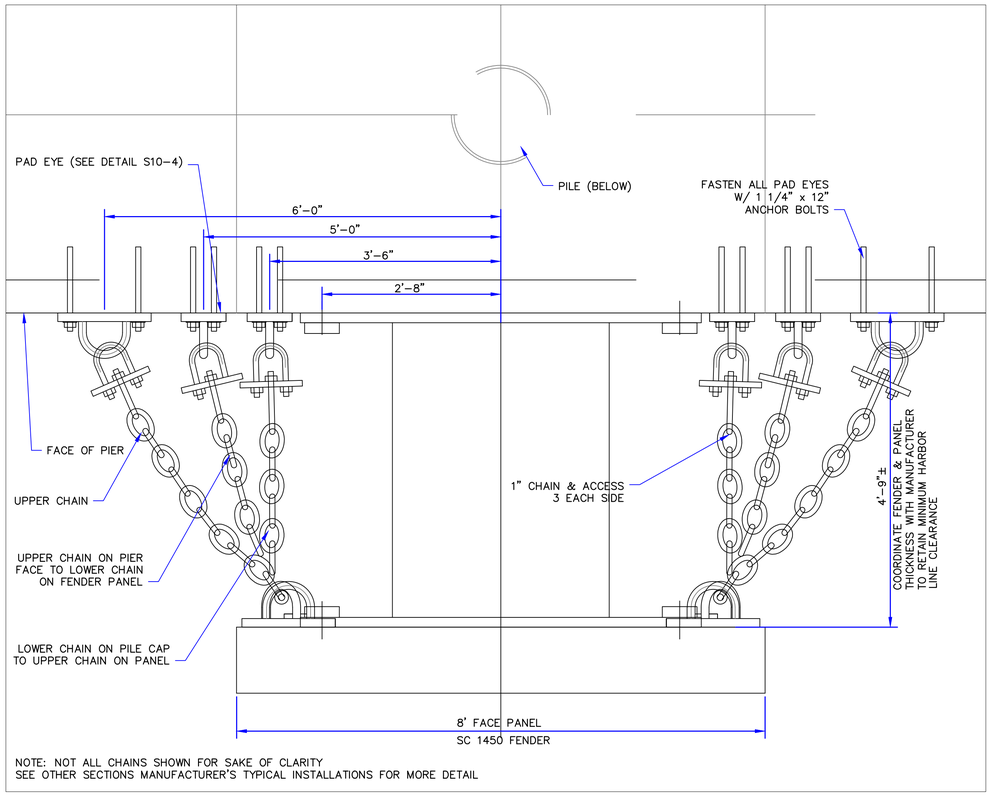

NOTE: NOT ALL CHAINS SHOWN FOR SAKE OF CLARITY
SEE OTHER SECTIONS MANUFACTURER'S TYPICAL INSTALLATIONS FOR MORE DETAIL

SECTION S9-2
TYP SHIP BERTH FENDER
SCALE 1" = 1'-1"

NOT FOR CONSTRUCTION

Foth
FOTH INFRASTRUCTURE & ENVIRONMENT, LLC
2514 S 102ND ST
WEST ALLIS, WI 53227

THIS DOCUMENT MAY NOT BE USED WITHOUT THE WRITTEN APPROVAL OF FOTH INFRASTRUCTURE AND ENVIRONMENT, LLC. UNAPPROVED USE IS THE SOLE RESPONSIBILITY OF THE UNAUTHORIZED USER.

IT IS A VIOLATION OF LAW FOR ANY PERSON TO ALTER THIS DOCUMENT UNLESS ACTING UNDER THE DIRECTION OF A LICENSED PROFESSIONAL ENGINEER.

THIS DRAWING WAS PREPARED AT THE GRAPHIC SCALE INDICATED. INACCURACIES IN THE STATED SCALE MAY BE INTRODUCED WHEN DRAWINGS ARE REPRODUCED BY ANY MEANS.

WEC ENERGY GROUP - BUSINESS SERVICES
MILWAUKEE, WISCONSIN
MILWAUKEE ESTUARY DREDGED MATERIAL MANAGEMENT FACILITY

REVISIONS

NO.	BY	DATE	DESCRIPTION
△		-	
△		-	
△		-	
△		-	
△		-	
△		-	
△		-	

DATE OF PREPARATION

	BY	DATE
SURVEYED	-	-
DRAWN	MXS6	11/05/2020
DESIGNED	MXS6	11/05/2020
CHECKED	TSW1	11/08/2020

FENDER DETAILS

SCALE:
AS NOTED

PROJECT NO: 0019W012
SHEET NUMBER
S09

Tuesday, May 07, 2019 7:51:01 AM
c:\pw workdir\pw_ie\fvd_ltsb\d0423758\s09 - fender details.dwg

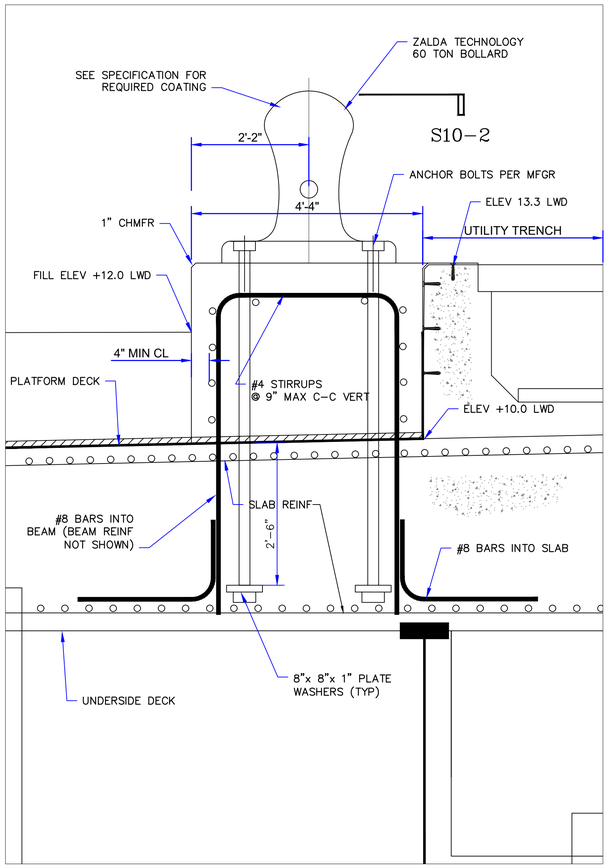

SECTION S10-1
60 TON BOLLARD
SCALE 3/4"= 1'-0"

CONTRACTOR TO APPLY MASTERSEAL TX1 OR EQUIVALENT TO FILL ALL BOLT RECESSES.

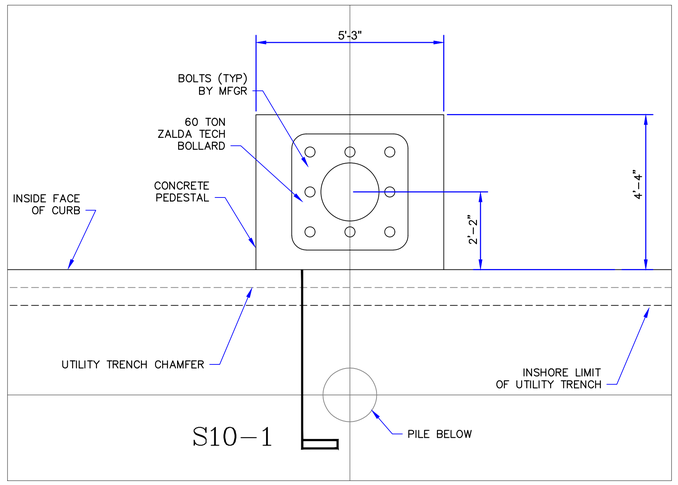

DETAIL S10-2
60 TON BOLLARD & PAD
SCALE 1/2"= 1'-0"

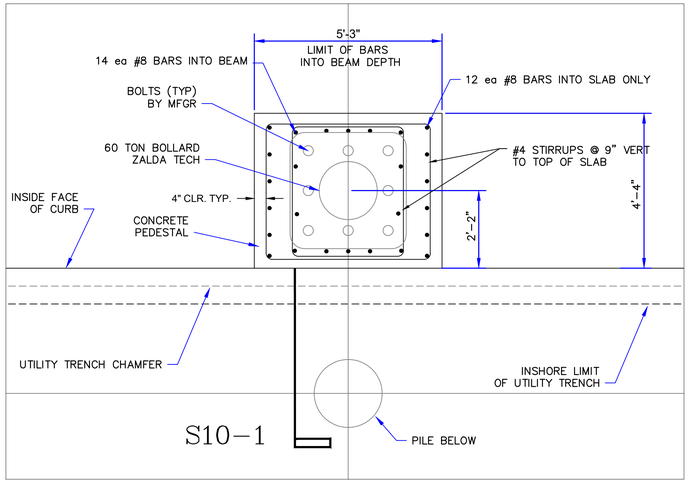

DETAIL S10-3
60 TON BOLLARD & PAD
SCALE 1/2"= 1'-0"

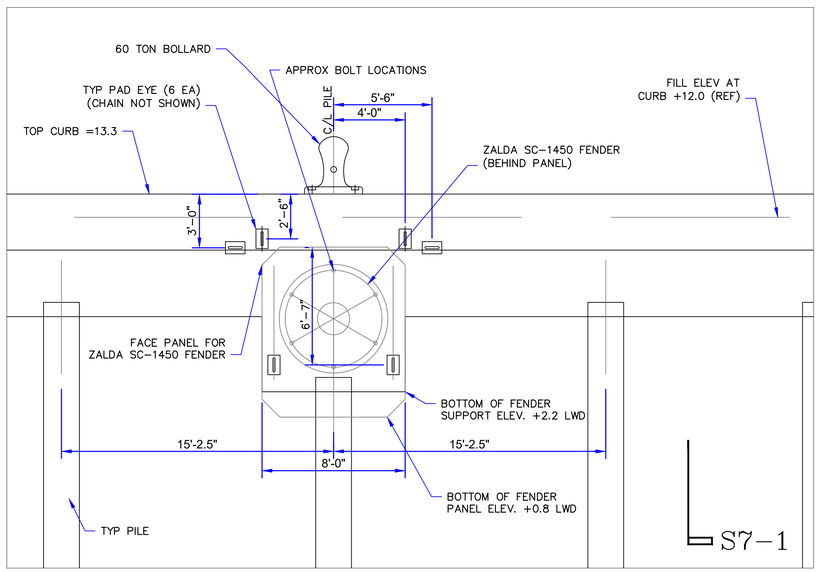

ELEVATION S10-4
FRONT FACE OF PLATFORM
SCALE 1/4" = 1'-0"

NOT FOR CONSTRUCTION

Foth
FOTH INFRASTRUCTURE & ENVIRONMENT, LLC
2514 S 102ND ST
WEST ALLIS, WI 53227

THIS DOCUMENT MAY NOT BE USED WITHOUT THE WRITTEN APPROVAL OF FOTH INFRASTRUCTURE AND ENVIRONMENT, LLC. UNAPPROVED USE IS THE SOLE RESPONSIBILITY OF THE UNAUTHORIZED USER.

IT IS A VIOLATION OF LAW FOR ANY PERSON TO ALTER THIS DOCUMENT UNLESS ACTING UNDER THE DIRECTION OF A LICENSED PROFESSIONAL ENGINEER.

THIS DRAWING WAS PREPARED AT THE GRAPHIC SCALE INDICATED. INACCURACIES IN THE STATED SCALE MAY BE INTRODUCED WHEN DRAWINGS ARE REPRODUCED BY ANY MEANS.

WEC ENERGY GROUP -
BUSINESS SERVICES
MILWAUKEE, WISCONSIN

MILWAUKEE ESTUARY DREDGED
MATERIAL MANAGEMENT FACILITY

REVISIONS			
NO.	BY	DATE	DESCRIPTION
		-	

DATE OF PREPARATION

	BY	DATE
SURVEYED	-	-
DRAWN	MXS6 / JRS6	11/05/2020
DESIGNED	MXS6	11/05/2020
CHECKED	TSW1	11/08/2020

BOLLARD
DETAILS

SCALE:
AS NOTED

PROJECT NO: 0019W012

SHEET NUMBER
S10

Tuesday, Nov 03, 2020 7:35:01 AM
I:\Projects\WEC_MMF_Jeff\0019W012\Civil\S10-1.dwg

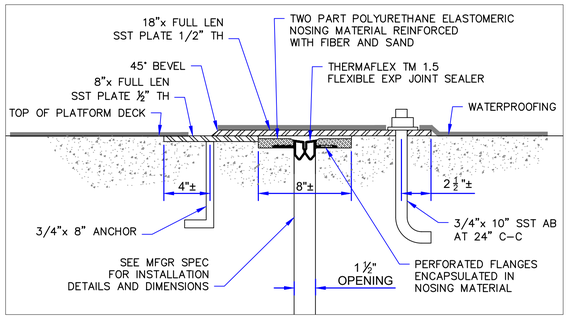

S11–1 EXPANSION JOINT & SEAL

TYPICAL ALL EXPANSION JOINTS SHOWN ON PLANS
BEFORE BACKFILL – COVER JOINT WITH 3' WIDE STRIP OF NON–WOVEN FILTER CLOTH
AND SEAL BOTH SIDES IN LONGITUDINAL DIRECTION WITH 3" WIDE STRIP OF ASHPHALTIC CEMENT
OMIT WATERPROOFING UNDER TRENCH & AT FRONT FACE OF PLATFORM, OMIT PLATES UNDER TRENCH
MAINTAIN SPACE SHOWN BETWEEN BOTTOM OF TRENCH & TOP OF SEAL
SCALE 2" = 1'–0"

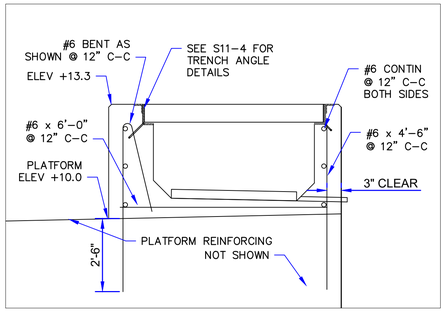

NOTE: SEE S07 FOR DIMENSIONS
AND DETAILS NOT SHOWN. COORDINATE
REINFORCEMENT WITH CONCRETE DRAWINGS
S16 TO 18

S11–2 UTILITY TRENCH REINF

SCALE 1/2" = 1'–0"

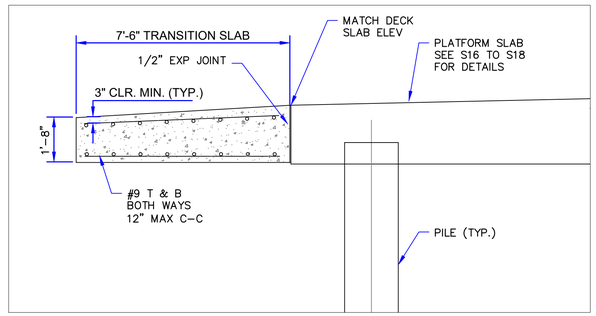

S11–3 TRANSITION SLAB

SCALE 3/8" = 1'–0"

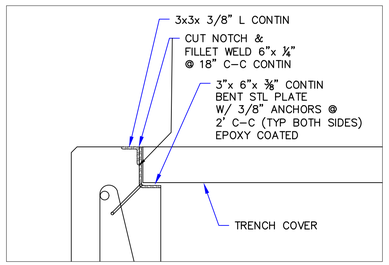

S11–4 UTILITY TRENCH ANGLE

SCALE 1" = 1'–0"

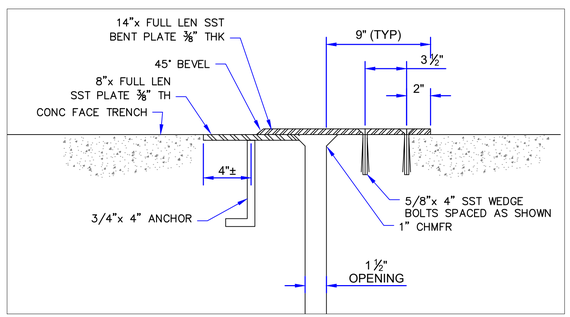

S11–5 EXP JOINT @ TRENCH WALL

SCALE 2" = 1'–0"

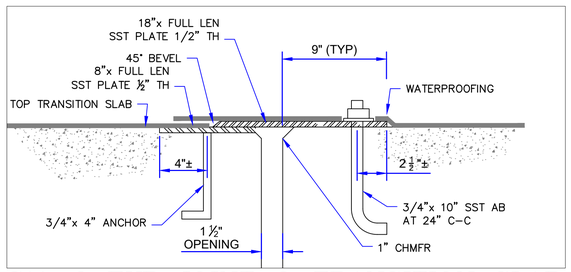

S11–6 EXP JOINT @ TRANSITION SLAB

EXTEND WATERPROOFING FROM PLATFORM
SCALE 2" = 1'–0"

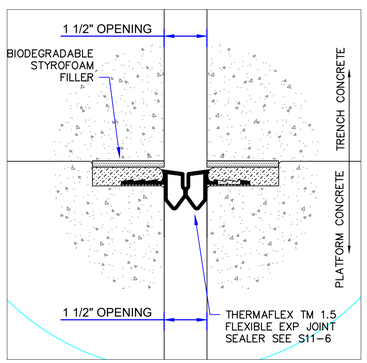

S11–7 EXP JOINT UNDER TRENCH

SCALE 4" = 1'–0"

NOT FOR CONSTRUCTION

Tuesday, Nov 03, 2020 9:20:01 AM
U:\fm_work\chap_struct_pw\0019W012\Sht\S11 base sheets.dwg

Foth
FOTH INFRASTRUCTURE & ENVIRONMENT, LLC
2514 S 102ND ST
WEST ALLIS, WI 53227

THIS DOCUMENT MAY NOT BE USED WITHOUT THE WRITTEN APPROVAL OF FOTH INFRASTRUCTURE AND ENVIRONMENT, LLC. UNAPPROVED USE IS THE SOLE RESPONSIBILITY OF THE UNAUTHORIZED USER.

IT IS A VIOLATION OF LAW FOR ANY PERSON TO ALTER THIS DOCUMENT UNLESS ACTING UNDER THE DIRECTION OF A LICENSED PROFESSIONAL ENGINEER.

THIS DRAWING WAS PREPARED AT THE GRAPHIC SCALE INDICATED. INACCURACIES IN THE STATED SCALE MAY BE INTRODUCED WHEN DRAWINGS ARE REPRODUCED BY ANY MEANS.

WEC ENERGY GROUP - BUSINESS SERVICES

MILWAUKEE, WISCONSIN

MILWAUKEE ESTUARY DREDGED MATERIAL MANAGEMENT FACILITY

REVISIONS			
NO.	BY	DATE	DESCRIPTION

DATE OF PREPARATION

	BY	DATE
SURVEYED	-	-
DRAWN	MXS6 / JRS6	11/05/2020
DESIGNED	MXS6	11/05/2020
CHECKED	TSW1	11/08/2020

BULKHEAD AND UTILITY TRENCH DETAILS - SHEET 1 OF 3

SCALE:
AS NOTED

PROJECT NO: 0019W012

SHEET NUMBER
S11

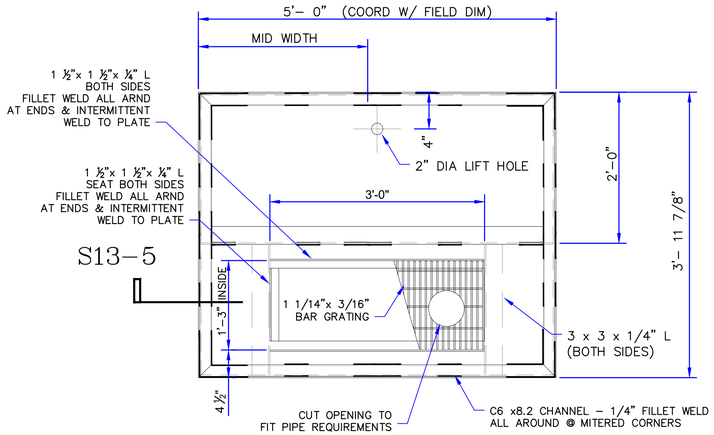

DETAIL S12–1

SPECIAL TRENCH COVER W/ DRAIN FOR FIRE & WATER RISERS
SCALE 1" = 1'–0"

MATERIAL A–36 STEEL
COATING – EPOXY SEE PILE SPECS
QUANTITY = 6 EA TO FIT AS REQ – COORD W/ PIPING

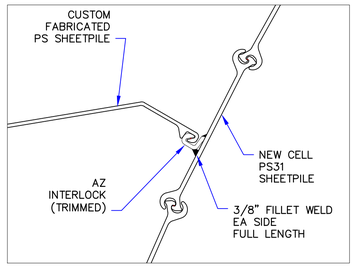

DETAIL S12–2

SCALE 1 1/2" = 1'–0"

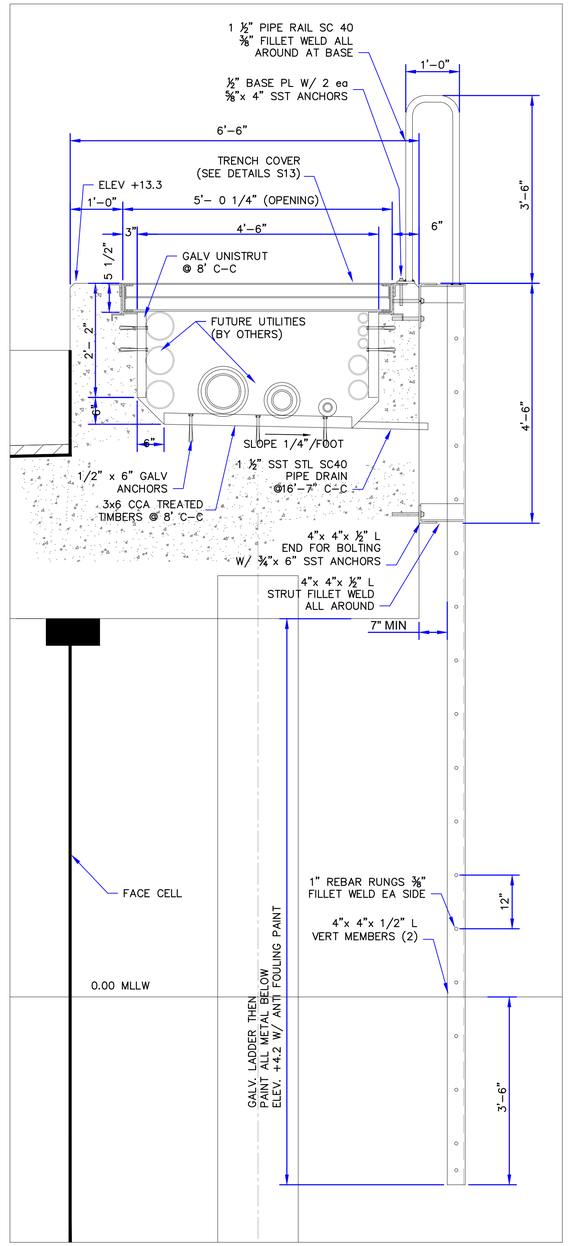

DETAIL S12–5

UTILITY TRENCH & EMERG LADDER @ RELIEVING PLATFORM
SCALE ¾" = 1'–0"

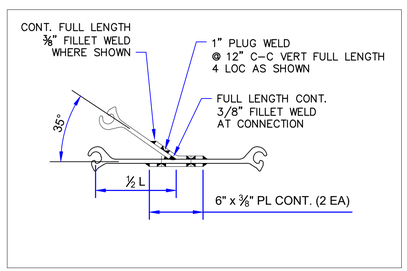

DETAIL S12–3

SCALE 1 1/2" = 1'–0" TYP JUNCTION PILE

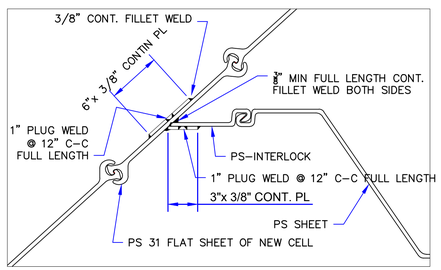

DETAIL S12–4

SCALE 1 1/2" = 1'–0" TYP PS PILE CONN TO NEW CELL

NOT FOR CONSTRUCTION

Foth
FOTH INFRASTRUCTURE & ENVIRONMENT, LLC
2514 S 102ND ST
WEST ALLIS, WI 53227

THIS DOCUMENT MAY NOT BE USED WITHOUT THE WRITTEN APPROVAL OF FOTH INFRASTRUCTURE AND ENVIRONMENT, LLC. UNAPPROVED USE IS THE SOLE RESPONSIBILITY OF THE UNAUTHORIZED USER.

IT IS A VIOLATION OF LAW FOR ANY PERSON TO ALTER THIS DOCUMENT UNLESS ACTING UNDER THE DIRECTION OF A LICENSED PROFESSIONAL ENGINEER.

THIS DRAWING WAS PREPARED AT THE GRAPHIC SCALE INDICATED. INACCURACIES IN THE STATED SCALE MAY BE INTRODUCED WHEN DRAWINGS ARE REPRODUCED BY ANY MEANS.

WEC ENERGY GROUP - BUSINESS SERVICES

MILWAUKEE, WISCONSIN

MILWAUKEE ESTUARY DREDGED MATERIAL MANAGEMENT FACILITY

REVISIONS			
NO.	BY	DATE	DESCRIPTION
1		-	
2		-	
3		-	
4		-	
5		-	
6		-	
7		-	

DATE OF PREPARATION

	BY	DATE
SURVEYED	-	-
DRAWN	MXS6 / JRS6	11/05/2020
DESIGNED	MXS6	11/05/2020
CHECKED	TSW1	11/08/2020

BULKHEAD AND UTILITY TRENCH DETAILS - SHEET 2 OF 3

SCALE:
AS NOTED

PROJECT NO: 0019W012

SHEET NUMBER
S12

Tuesday, May 07, 2019 7:51:01 AM
c:\pw_work\jrsx_a042_v2\d042207\Det12s2.dgn bulkhead and utility trench details.dwg

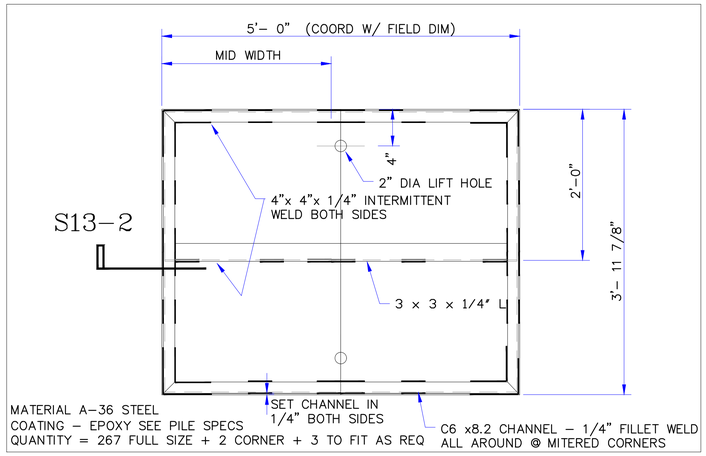

DETAIL S13–1
UTILITY TRENCH COVER PLATE
SCALE 1" = 1'–0"

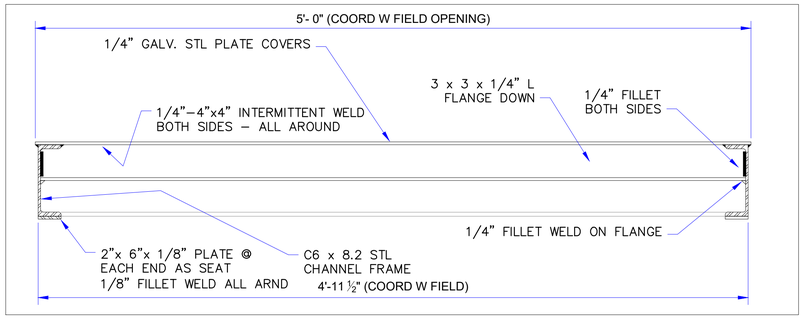

DETAIL S13–2
UTILITY TRENCH COVER PLATE
SCALE 2" = 1'–0"

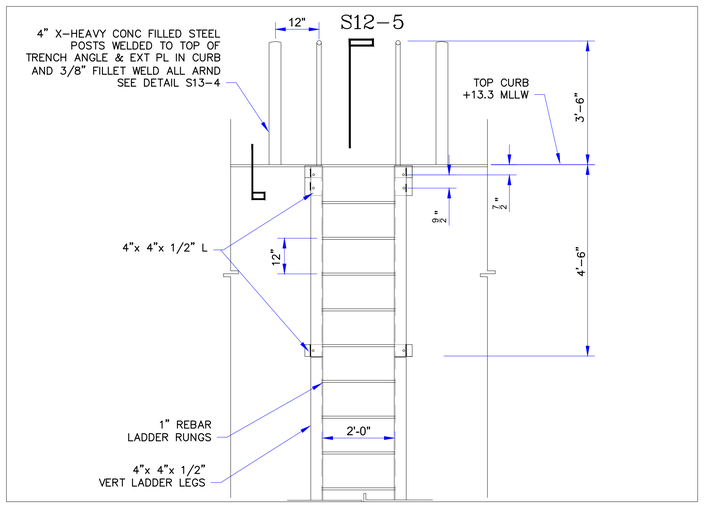

DETAIL S13–3
EMERG LADDER
FRONT ELEVATION
SCALE ½" = 1'–0"

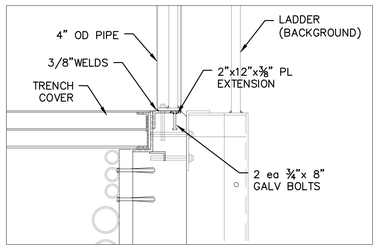

DETAIL S13–4
SCALE 1"=1'–0"
4" POST CONN DETAIL

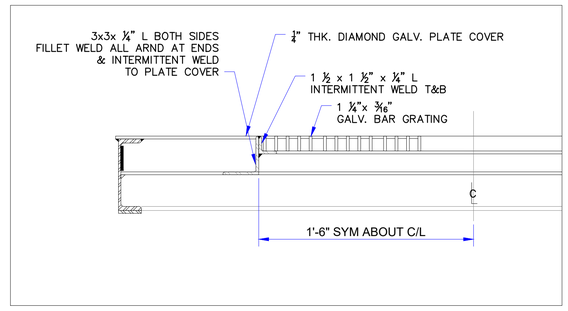

DETAIL S13–5
SECTION OF TRENCH COVER W/ DRAIN
SCALE 2" = 1'–0" – SEE DETAIL S13–1 FOR INFO NOT SHOWN

NOT FOR CONSTRUCTION

Foth
FOTH INFRASTRUCTURE & ENVIRONMENT, LLC
2514 S 102ND ST
WEST ALLIS, WI 53227

THIS DOCUMENT MAY NOT BE USED WITHOUT THE WRITTEN APPROVAL OF FOTH INFRASTRUCTURE AND ENVIRONMENT, LLC. UNAPPROVED USE IS THE SOLE RESPONSIBILITY OF THE UNAUTHORIZED USER.

IT IS A VIOLATION OF LAW FOR ANY PERSON TO ALTER THIS DOCUMENT UNLESS ACTING UNDER THE DIRECTION OF A LICENSED PROFESSIONAL ENGINEER.

THIS DRAWING WAS PREPARED AT THE GRAPHIC SCALE INDICATED. INACCURACIES IN THE STATED SCALE MAY BE INTRODUCED WHEN DRAWINGS ARE REPRODUCED BY ANY MEANS.

WEC ENERGY GROUP -
BUSINESS SERVICES
MILWAUKEE, WISCONSIN

MILWAUKEE ESTUARY DREDGED
MATERIAL MANAGEMENT FACILITY

NO.	BY	DATE	DESCRIPTION
◁		-	
◁		-	
◁		-	
◁		-	
◁		-	
◁		-	
◁		-	

REVISIONS

DATE OF PREPARATION

	BY	DATE
SURVEYED	-	-
DRAWN	MXS6 / JRS6	11/05/2020
DESIGNED	MXS6	11/05/2020
CHECKED	TSW1	11/08/2020

BULKHEAD AND UTILITY TRENCH DETAILS - SHEET 3 OF 3

SCALE:
AS NOTED

PROJECT NO: 0019W012

SHEET NUMBER
S13

Plot Name: \\mke-fs01\projects\0019W012\CAD\DGN\Detail\Detail_Sheet_Variable.dgn
Tuesday, May 07, 2019 7:51:21 AM

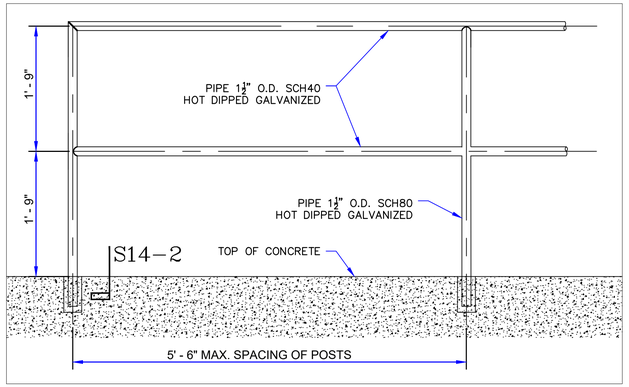

SECTION S14-1
ELEVATION OF GUARD RAILING
SCALE 1" = 1'-0"

SECTION S14-2
PIPE RAILING CONNECTIONS
SCALE 3" = 1'-0"

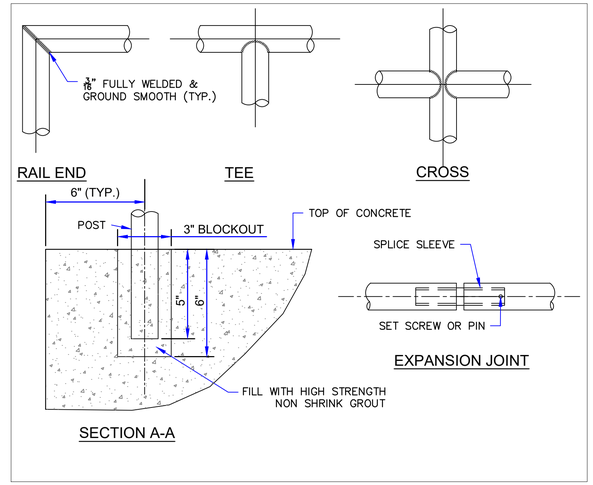

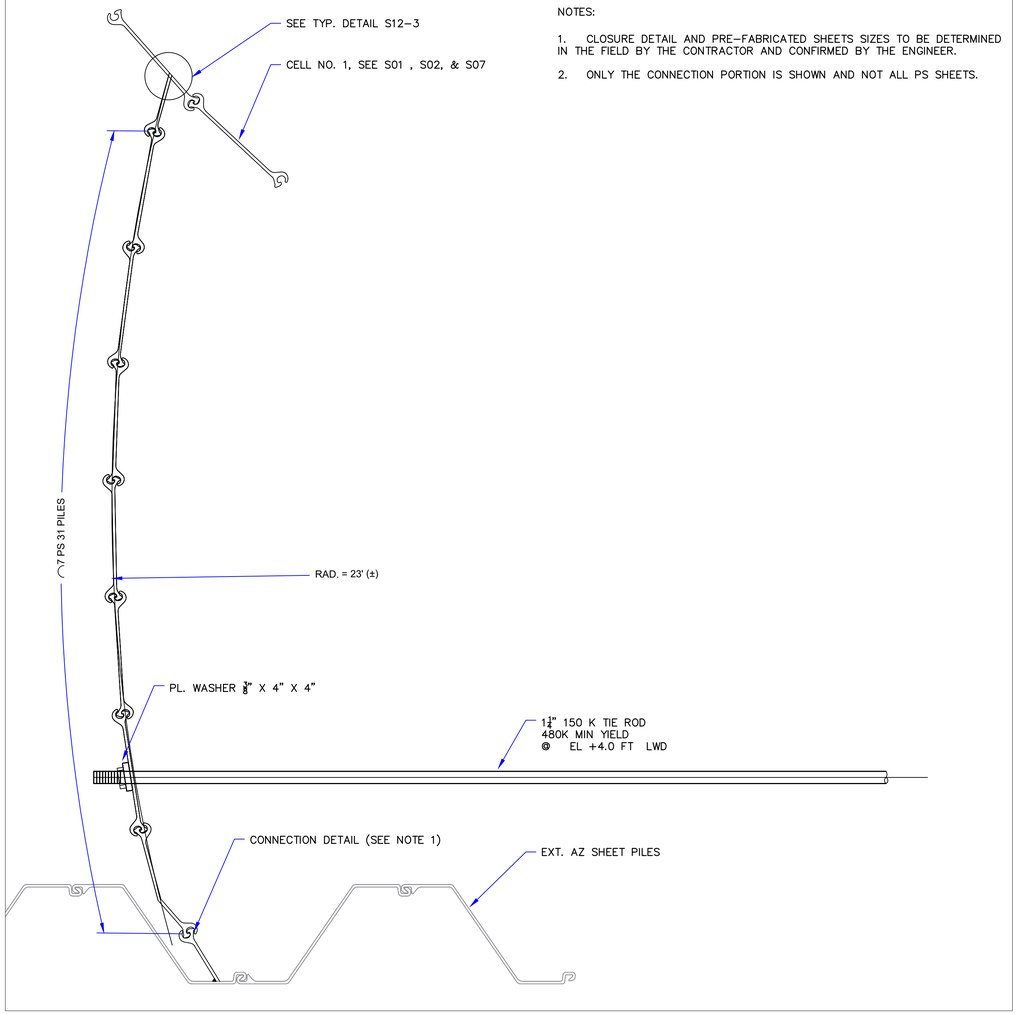

NOTES:

1. CLOSURE DETAIL AND PRE-FABRICATED SHEETS SIZES TO BE DETERMINED IN THE FIELD BY THE CONTRACTOR AND CONFIRMED BY THE ENGINEER.
2. ONLY THE CONNECTION PORTION IS SHOWN AND NOT ALL PS SHEETS.

SECTION S14-3
TIE IN TO EXISTING BULKHEAD - DETAIL A
SCALE 1" = 1'-0"

NOTES:
1. CONTRACTOR TO PREPARE AS-BUILT OF EXISTING WALL, PREPARE CONNECTION DETAIL, AND GET ENGINEER APPROVAL PRIOR TO CONSTRUCTION.

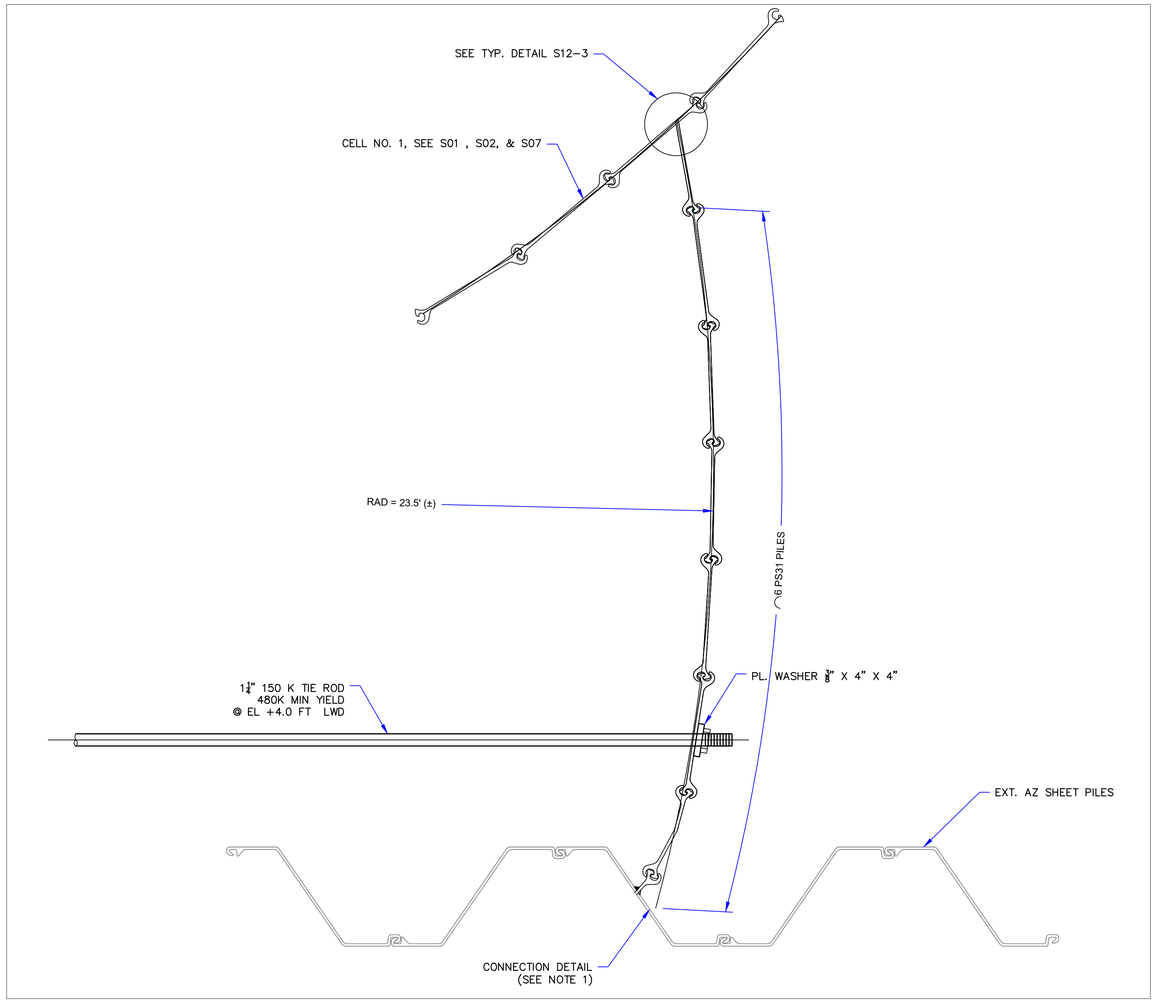

SECTION S14-4
TIE IN TO EXISTING BULKHEAD - DETAIL B
SCALE 1" = 1'-0"

NOT FOR CONSTRUCTION

Foth
FOTH INFRASTRUCTURE & ENVIRONMENT, LLC
15 CREEK ROAD
MARION, MA 02738

THIS DOCUMENT MAY NOT BE USED WITHOUT THE WRITTEN APPROVAL OF FOTH INFRASTRUCTURE AND ENVIRONMENT, LLC. UNAPPROVED USE IS THE SOLE RESPONSIBILITY OF THE UNAUTHORIZED USER.

IT IS A VIOLATION OF LAW FOR ANY PERSON TO ALTER THIS DOCUMENT UNLESS ACTING UNDER THE DIRECTION OF A LICENSED PROFESSIONAL ENGINEER.

THIS DRAWING WAS PREPARED AT THE GRAPHIC SCALE INDICATED. INACCURACIES IN THE STATED SCALE MAY BE INTRODUCED WHEN DRAWINGS ARE REPRODUCED BY ANY MEANS.

WEC ENERGY GROUP - BUSINESS SERVICES
MILWAUKEE, WISCONSIN

MILWAUKEE ESTUARY DREDGED MATERIAL MANAGEMENT FACILITY

REVISIONS			
NO.	BY	DATE	DESCRIPTION

DATE OF PREPARATION

	BY	DATE
SURVEYED	-	-
DRAWN	XMS6 / JRS6	11/05/2020
DESIGNED	MXS6	11/05/2020
CHECKED	TSW1	11/08/2020

MISC. DETAILS

SCALE:
AS NOTED

PROJECT NO: 0019W012

SHEET NUMBER
S14

Tuesday, May 07, 2019 7:51 AM
V:\fe_work\Eve_shell_job\S4220175\Civil - miscellaneous details.dwg

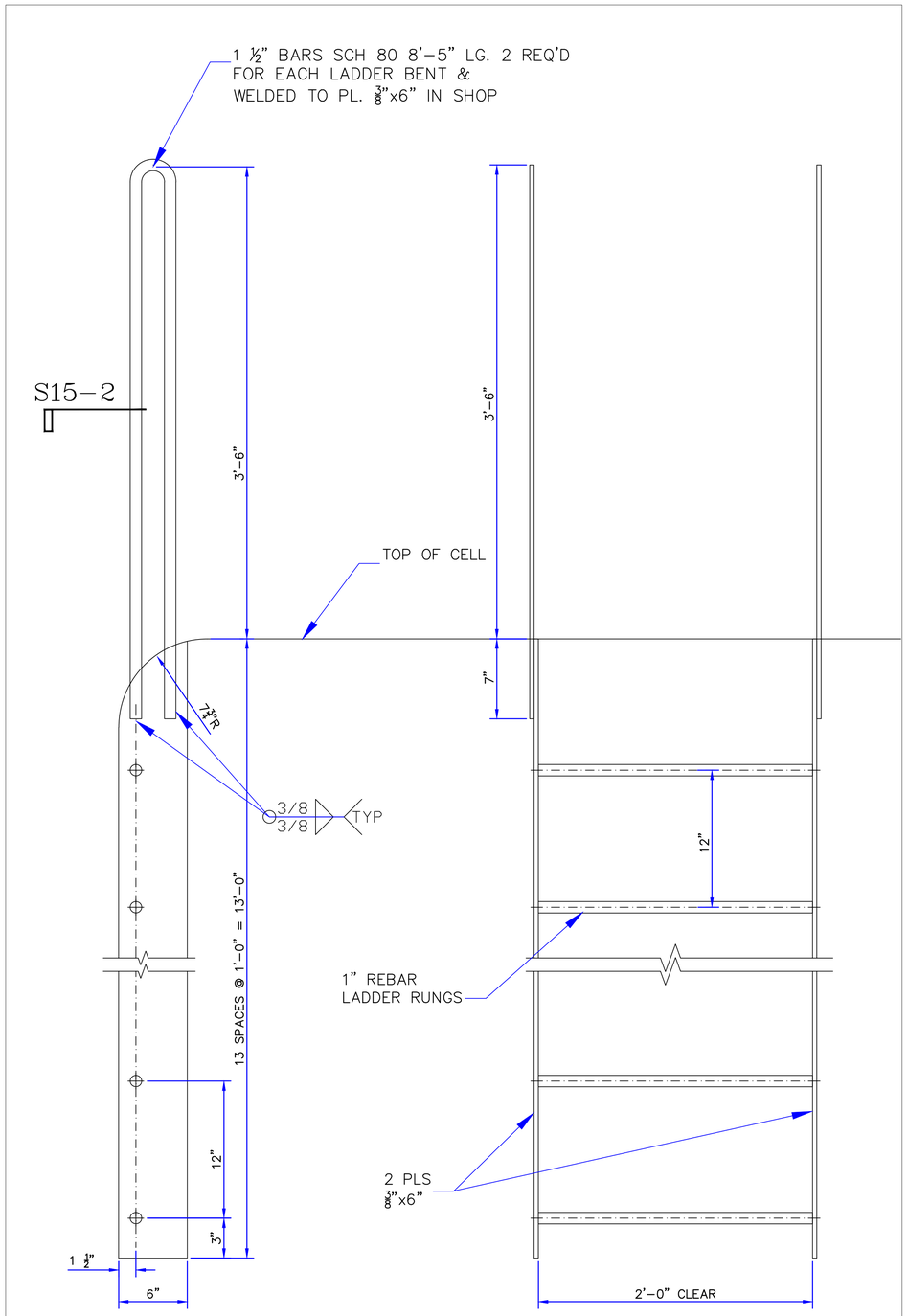

LADDERS SHOULD BE PROVIDED ON THE CELLS EVERY 100' AS SHOWN IN DRAWING S1

SECTION S15-1
LADDER DETAIL AT CELLS (WITHOUT RELIEVING PLATFORMS)
SCALE 2" = 1'-0"

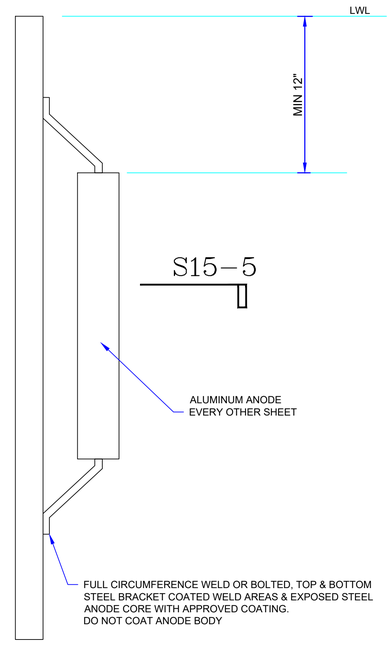

S15-3 SACRIFICIAL ANODE DETAIL
SCALE 2" = 1'-0"

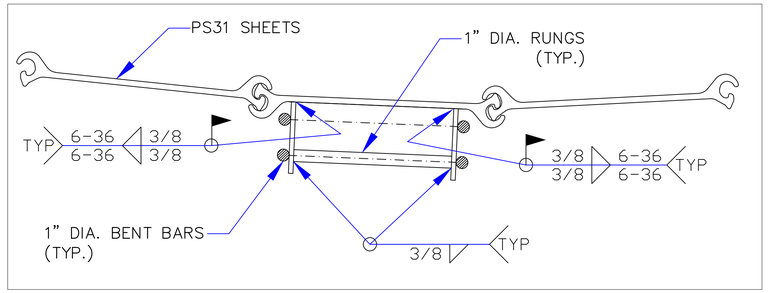

SECTION S15-2
LADDER CONNECTION DETAIL AT CELLS (WITHOUT RELIEVING PLATFORM)
SCALE 2" = 1'-0"

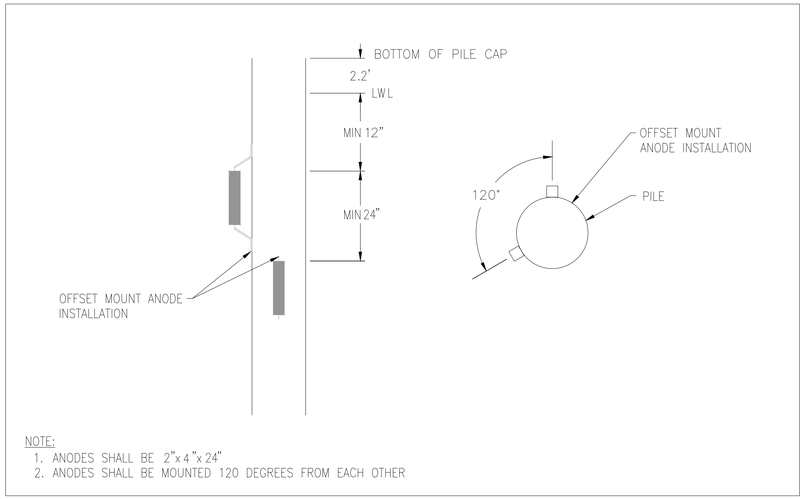

S15-4 PILE ANODE ATTACHMENT DETAIL
SCALE N.T.S.

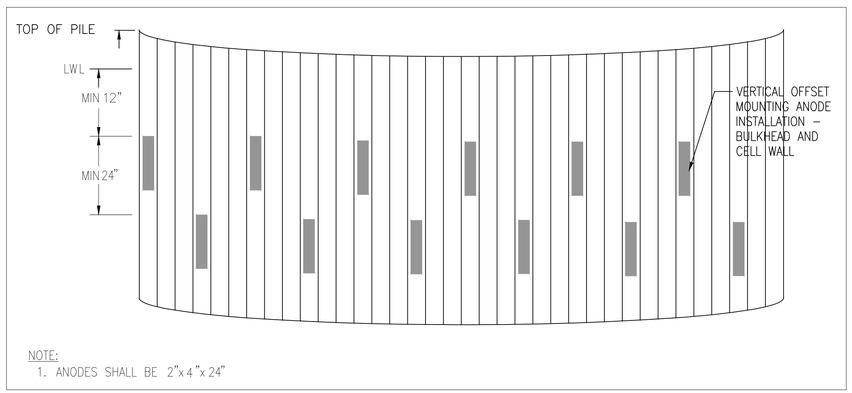

S15-5 SHEET PILE ANODE ATTACHMENT DETAIL
SCALE N.T.S.

NOT FOR CONSTRUCTION

Foth
FOTH INFRASTRUCTURE & ENVIRONMENT, LLC
15 CREEK ROAD
MARION, MA 02738

THIS DOCUMENT MAY NOT BE USED WITHOUT THE WRITTEN APPROVAL OF FOTH INFRASTRUCTURE AND ENVIRONMENT, LLC. UNAPPROVED USE IS THE SOLE RESPONSIBILITY OF THE UNAUTHORIZED USER.
IT IS A VIOLATION OF LAW FOR ANY PERSON TO ALTER THIS DOCUMENT UNLESS ACTING UNDER THE DIRECTION OF A LICENSED PROFESSIONAL ENGINEER.
THIS DRAWING WAS PREPARED AT THE GRAPHIC SCALE INDICATED. INACCURACIES IN THE STATED SCALE MAY BE INTRODUCED WHEN DRAWINGS ARE REPRODUCED BY ANY MEANS.

WEC ENERGY GROUP - BUSINESS SERVICES
MILWAUKEE, WISCONSIN
MILWAUKEE ESTUARY DREDGED MATERIAL MANAGEMENT FACILITY

NO.	BY	DATE	DESCRIPTION
REVISIONS			

DATE OF PREPARATION

	BY	DATE
SURVEYED	-	-
DRAWN	MXS6 / JRS6	11/05/2020
DESIGNED	MXS6	11/05/2020
CHECKED	TSW1	11/08/2020

EMERG. CELL LADDER DETAIL

SCALE:
AS NOTED

PROJECT NO: 0019W012
SHEET NUMBER
S15

Tuesday, May 07, 2019 7:51 AM
V:\pw_workflow_shell_prd\D0025\d0179\d179.i.miscellaneous sheets.dwg

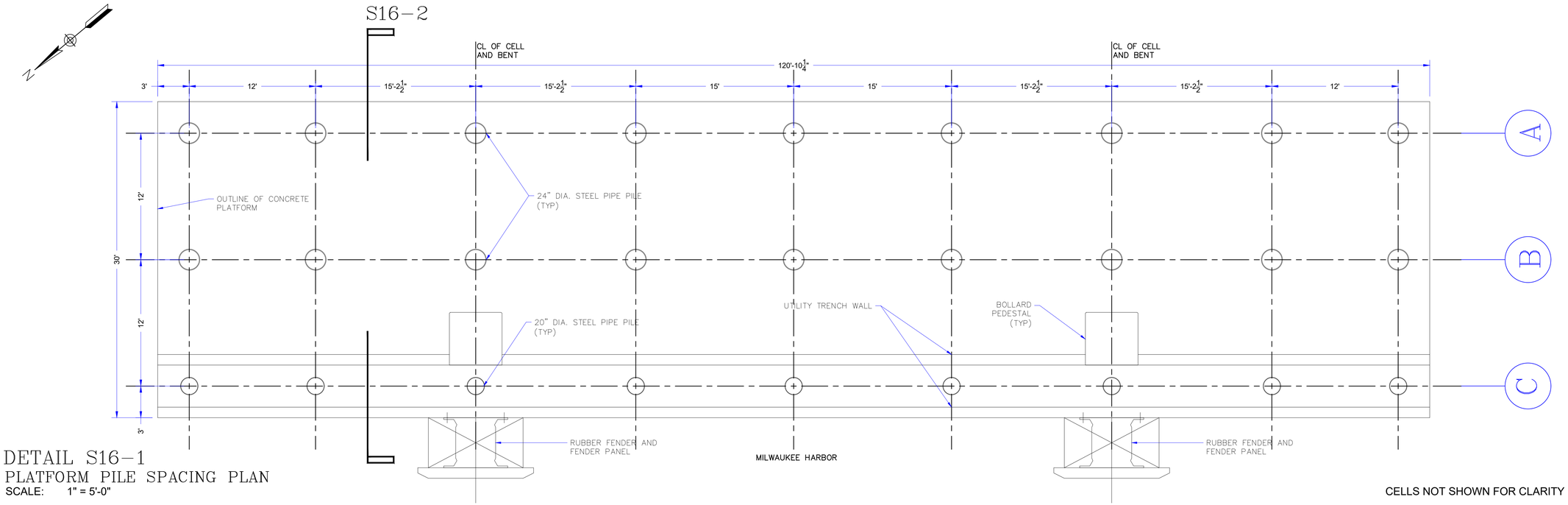

DETAIL S16-1
PLATFORM PILE SPACING PLAN
SCALE: 1" = 5'-0"

CELLS NOT SHOWN FOR CLARITY

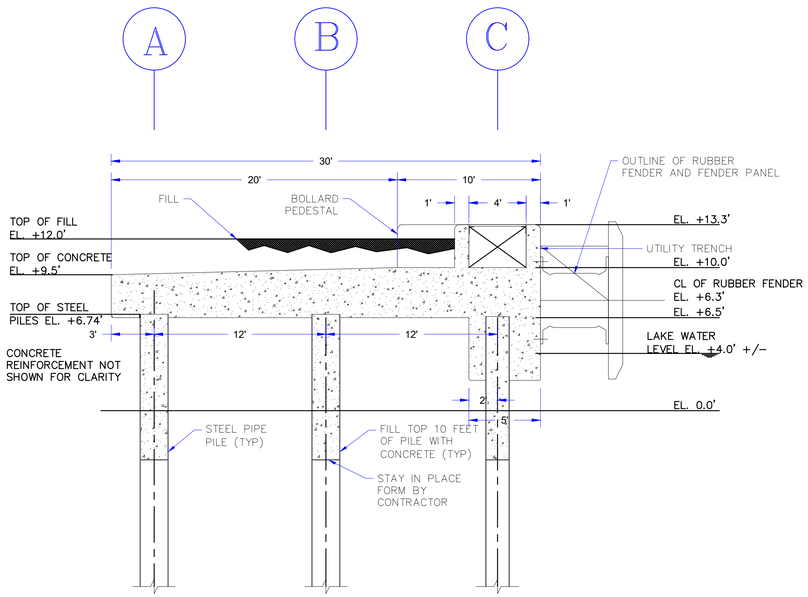

SECTION S16-2
TYPICAL PLATFORM SECTION
SCALE: 1" = 5'-0"

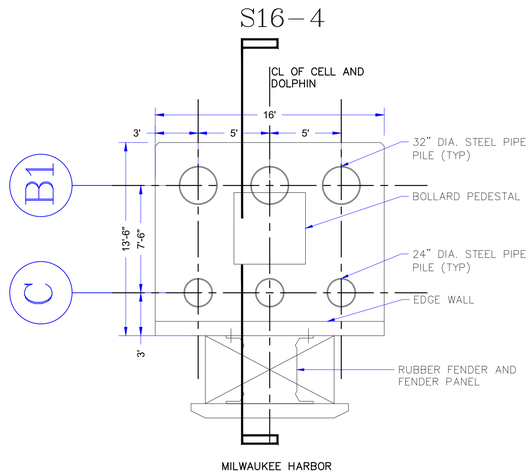

DETAIL S16-3
DOLPHIN PILE SPACING PLAN
SCALE: 1" = 5'-0"

CELLS NOT SHOWN FOR CLARITY

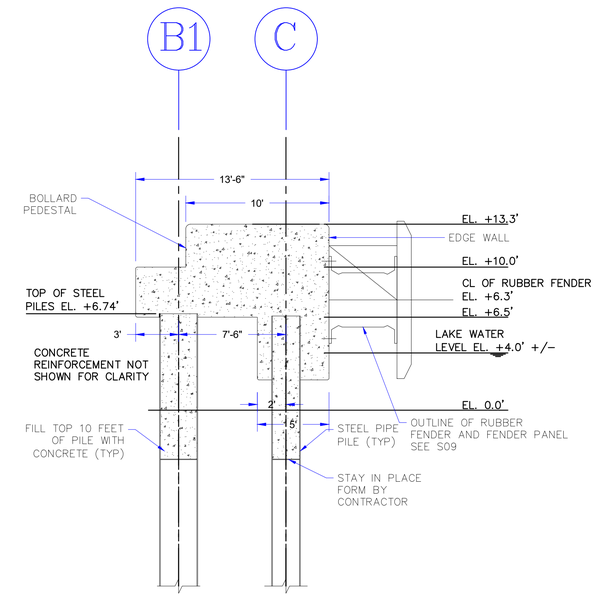

SECTION S16-4
TYPICAL DOLPHIN SECTION
SCALE: 1" = 5'-0"

CELLS NOT SHOWN FOR CLARITY
BOLLARD NOT SHOWN FOR CLARITY

NOT FOR CONSTRUCTION

Foth
FOTH INFRASTRUCTURE & ENVIRONMENT, LLC
2514 S 102ND ST
WEST ALLIS, WI 53227

THIS DOCUMENT MAY NOT BE USED WITHOUT THE WRITTEN APPROVAL OF FOTH INFRASTRUCTURE AND ENVIRONMENT, LLC. UNAPPROVED USE IS THE SOLE RESPONSIBILITY OF THE UNAUTHORIZED USER.

IT IS A VIOLATION OF LAW FOR ANY PERSON TO ALTER THIS DOCUMENT UNLESS ACTING UNDER THE DIRECTION OF A LICENSED PROFESSIONAL ENGINEER.

THIS DRAWING WAS PREPARED AT THE GRAPHIC SCALE INDICATED. INACCURACIES IN THE STATED SCALE MAY BE INTRODUCED WHEN DRAWINGS ARE REPRODUCED BY ANY MEANS.

WEC ENERGY GROUP - BUSINESS SERVICES
MILWAUKEE, WISCONSIN

MILWAUKEE ESTUARY DREDGED MATERIAL MANAGEMENT FACILITY

NO.	BY	DATE	DESCRIPTION
			REVISIONS

DATE OF PREPARATION

	BY	DATE
SURVEYED	-	-
DRAWN	AM / MXS	11/05/2020
DESIGNED	AM / MXS	11/05/2020
CHECKED	TSW1	11/08/2020

DECK AND DOLPHIN PLAN AND SECTIONS

SCALE:
AS NOTED

PROJECT NO: 0019W012

SHEET NUMBER
S16

Tuesday, May 07, 2019 10:01 AM

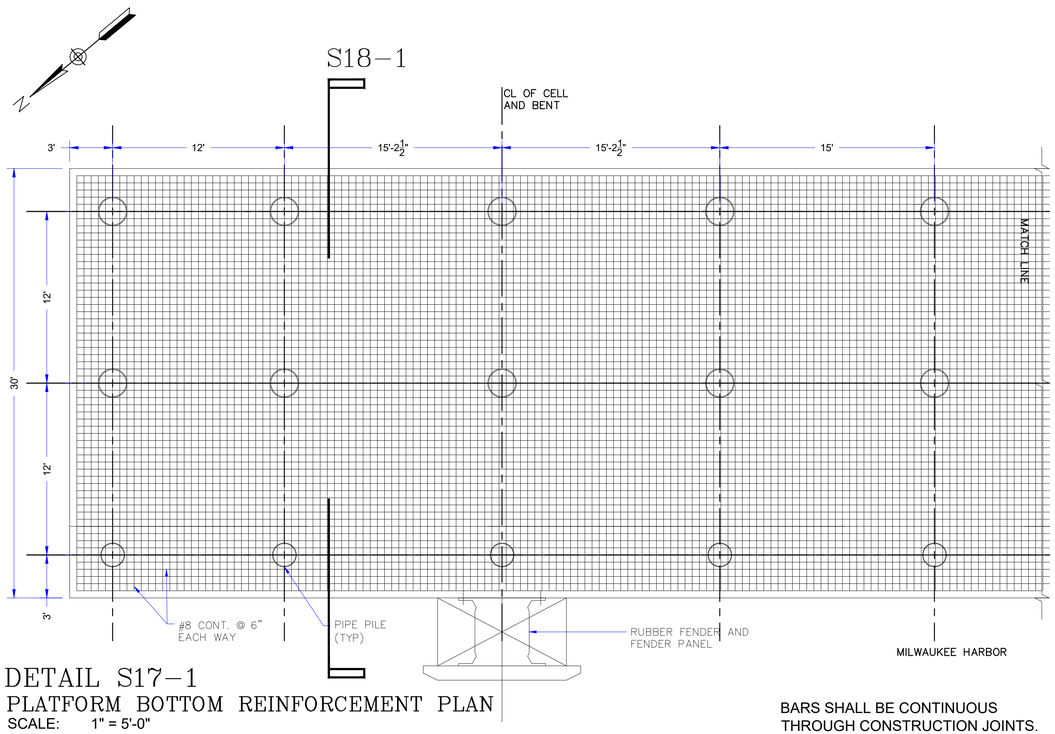

DETAIL S17–1
PLATFORM BOTTOM REINFORCEMENT PLAN
SCALE: 1" = 5'-0"

BARS SHALL BE CONTINUOUS THROUGH CONSTRUCTION JOINTS.

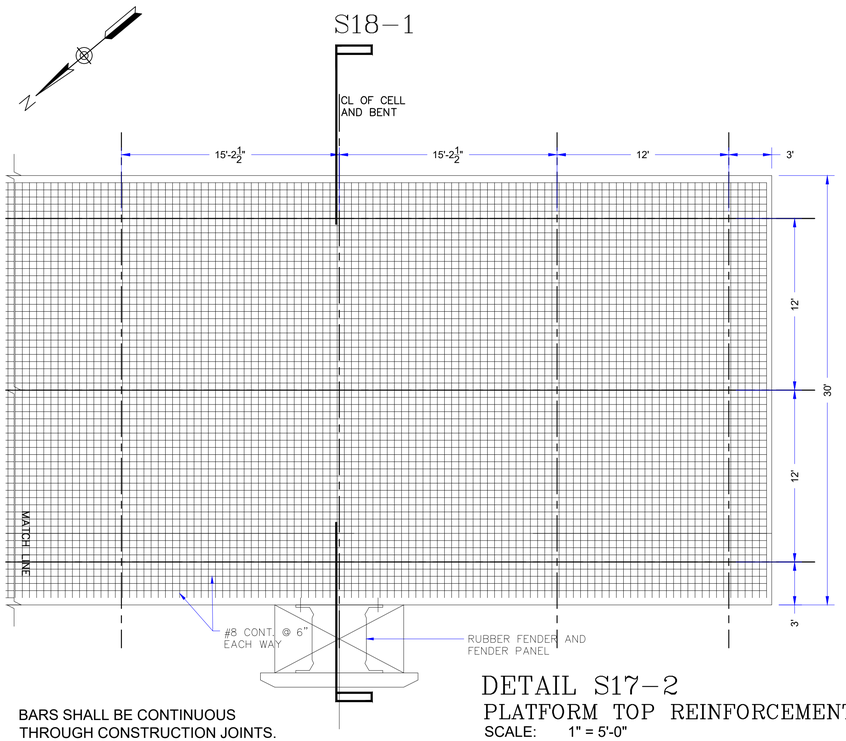

BARS SHALL BE CONTINUOUS THROUGH CONSTRUCTION JOINTS.

DETAIL S17–2
PLATFORM TOP REINFORCEMENT PLAN
SCALE: 1" = 5'-0"

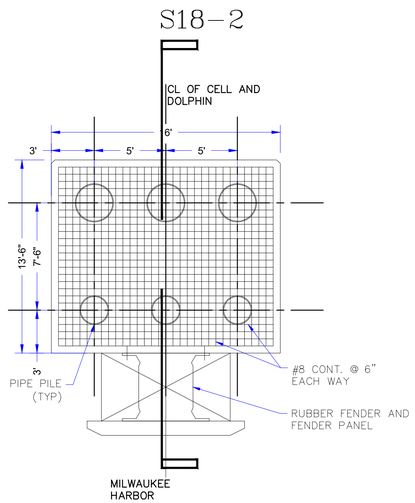

DETAIL S17–3
TYPICAL DOLPHIN BOTTOM REINFORCEMENT
SCALE: 1" = 5'-0"

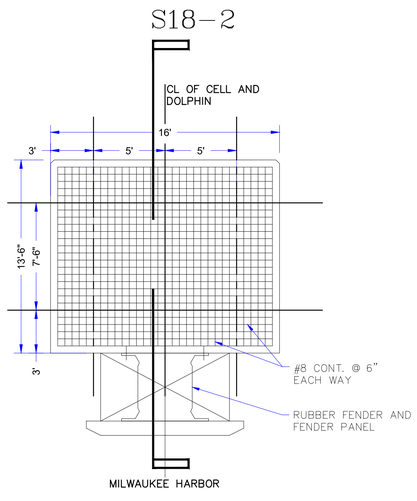

DETAIL S17–4
TYPICAL DOLPHIN TOP REINFORCEMENT
SCALE: 1" = 5'-0"

NOT FOR CONSTRUCTION

Foth
FOTH INFRASTRUCTURE & ENVIRONMENT, LLC
2514 S 102ND ST
WEST ALLIS, WI 53227

THIS DOCUMENT MAY NOT BE USED WITHOUT THE WRITTEN APPROVAL OF FOTH INFRASTRUCTURE AND ENVIRONMENT, LLC. UNAPPROVED USE IS THE SOLE RESPONSIBILITY OF THE UNAUTHORIZED USER.

IT IS A VIOLATION OF LAW FOR ANY PERSON TO ALTER THIS DOCUMENT UNLESS ACTING UNDER THE DIRECTION OF A LICENSED PROFESSIONAL ENGINEER.

THIS DRAWING WAS PREPARED AT THE GRAPHIC SCALE INDICATED. INACCURACIES IN THE STATED SCALE MAY BE INTRODUCED WHEN DRAWINGS ARE REPRODUCED BY ANY MEANS.

WEC ENERGY GROUP - BUSINESS SERVICES

MILWAUKEE, WISCONSIN

MILWAUKEE ESTUARY DREDGED MATERIAL MANAGEMENT FACILITY

REVISIONS			
NO.	BY	DATE	DESCRIPTION

DATE OF PREPARATION

	BY	DATE
SURVEYED	-	-
DRAWN	AM / MXS	11/05/2020
DESIGNED	AM / MXS	11/05/2020
CHECKED	TSW1	11/08/2020

DECK AND DOLPHIN REINFORCING: SHEET 1 OF 2

SCALE:

AS NOTED

PROJECT NO: 0019W012

SHEET NUMBER

S17

Tuesday, May 07, 2019 11:01:01 AM
c:\acw_tmp\Acw_plot_file\20200224104001.plt

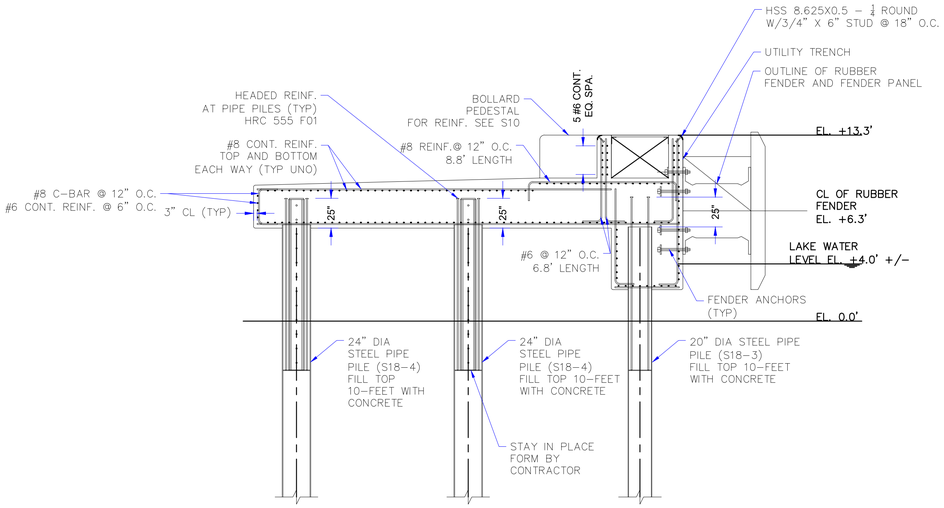

SECTION S18-1
TYPICAL PLATFORM REINFORCEMENT SECTION
SCALE: 1" = 5'-0"

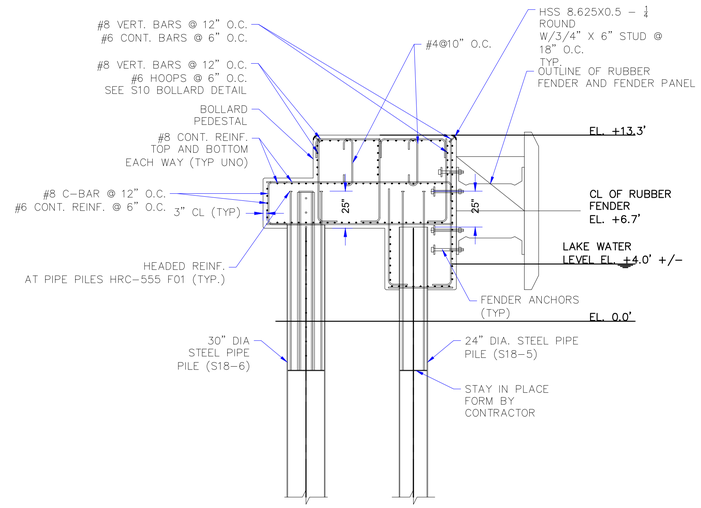

SECTION S18-2
TYPICAL DOLPHIN REINFORCEMENT SECTION
SCALE: 1" = 5'-0"

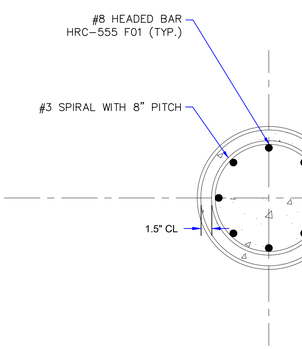

DETAIL S18-3
PLATFORM PIPE PILE
20" DIA. X 0.5" W.T.
SCALE: 1" = 0'-10"

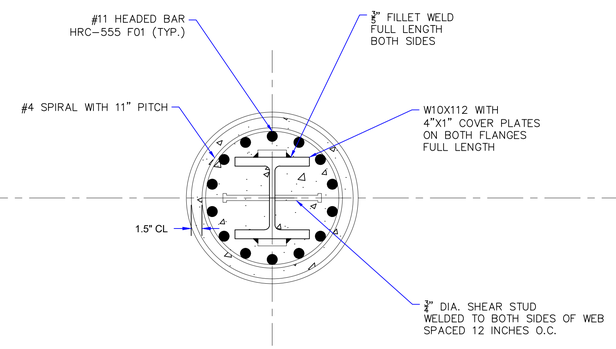

DETAIL S18-4
PLATFORM PIPE PILE
24" DIA. X 0.688" W.T.
SCALE: 1" = 0'-10"

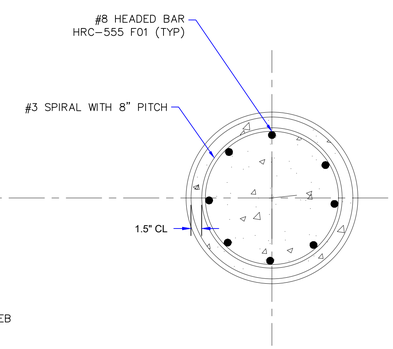

DETAIL S18-5
DOLPHIN PIPE PILE
24" DIA. X 0.688" W.T.
SCALE: 1" = 0'-10"

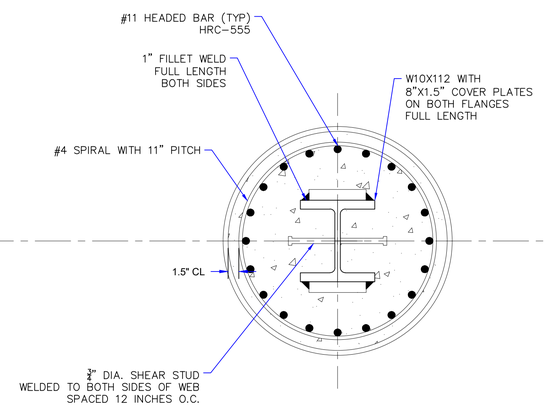

DETAIL S18-6
DOLPHIN PIPE PILE
32" DIA. X 0.688" W.T.
SCALE: 1" = 0'-10"

NOT FOR CONSTRUCTION

Foth
FOTH INFRASTRUCTURE & ENVIRONMENT, LLC
2514 S 102ND ST
WEST ALLIS, WI 53227

THIS DOCUMENT MAY NOT BE USED WITHOUT THE WRITTEN APPROVAL OF FOTH INFRASTRUCTURE AND ENVIRONMENT, LLC. UNAPPROVED USE IS THE SOLE RESPONSIBILITY OF THE UNAUTHORIZED USER.

IT IS A VIOLATION OF LAW FOR ANY PERSON TO ALTER THIS DOCUMENT UNLESS ACTING UNDER THE DIRECTION OF A LICENSED PROFESSIONAL ENGINEER.

THIS DRAWING WAS PREPARED AT THE GRAPHIC SCALE INDICATED. INACCURACIES IN THE STATED SCALE MAY BE INTRODUCED WHEN DRAWINGS ARE REPRODUCED BY ANY MEANS.

WEC ENERGY GROUP - BUSINESS SERVICES

MILWAUKEE, WISCONSIN

MILWAUKEE ESTUARY DREDGED MATERIAL MANAGEMENT FACILITY

REVISIONS

NO.	BY	DATE	DESCRIPTION
		-	
		-	
		-	
		-	
		-	
		-	
		-	

DATE OF PREPARATION

	BY	DATE
SURVEYED	-	-
DRAWN	AM / MXS	11/05/2020
DESIGNED	AM / MXS	11/05/2020
CHECKED	TSW1	11/08/2020

DECK AND DOLPHIN REINFORCING: SHEET 2 OF 2

SCALE:

AS NOTED

PROJECT NO: 0019W012

SHEET NUMBER

S18

Tuesday, May 07, 2019 7:51:01 AM
c:\pw_work\pw_jmaf_user\jmaf-d0026\d0026.dgn, v18 (geoffrey.thorp)

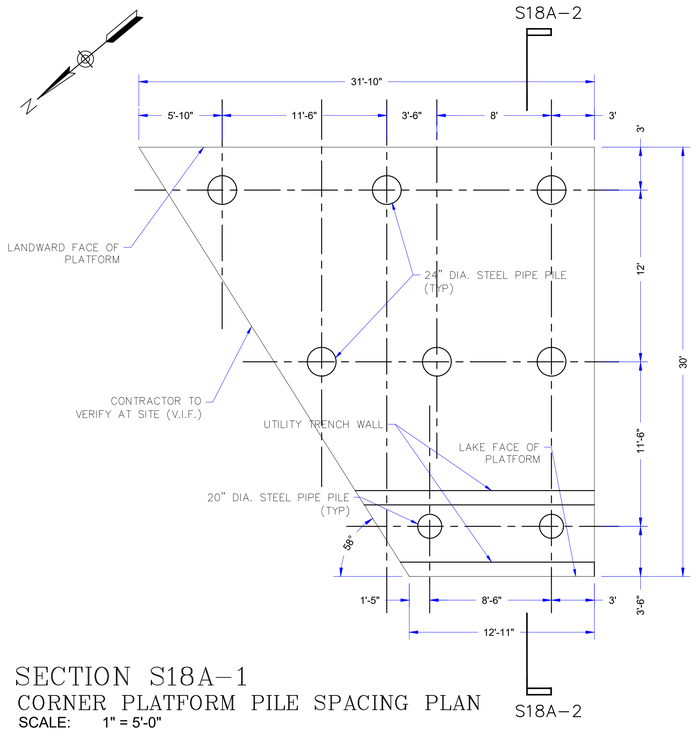

SECTION S18A-1

CORNER PLATFORM PILE SPACING PLAN

SCALE: 1" = 5'-0"

SEE S07 FOR PILES EMBEDMENT

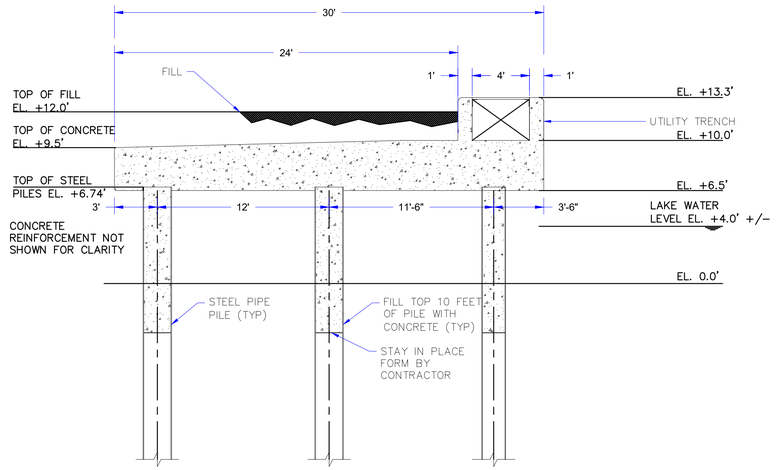

SECTION S18A-2

TYPICAL CORNER PLATFORM SECTION

SCALE: 1" = 5'-0"

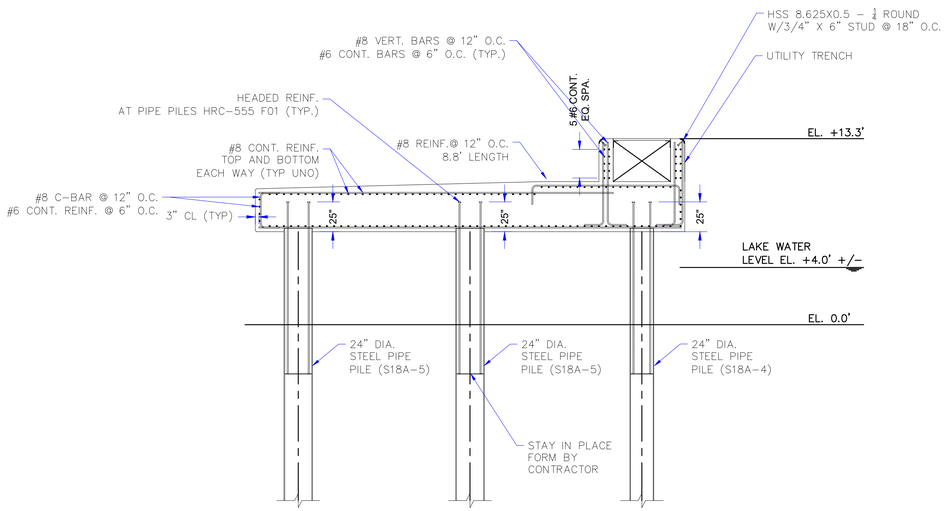

SECTION S18A-3

TYPICAL CORNER PLATFORM REINFORCEMENT SECTION

SCALE: 1" = 5'-0"

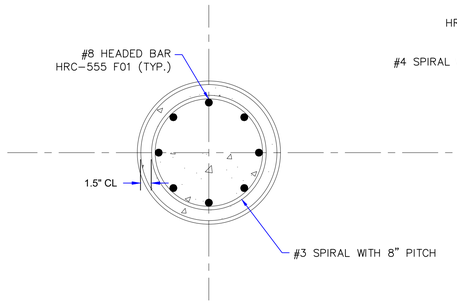

DETAIL S18A-4

CORNER PLATFORM PIPE PILE
20" DIA. X 0.5" W.T.

SCALE: 1" = 0'-10"

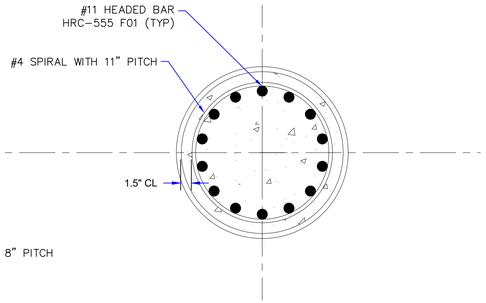

DETAIL S18A-5

CORNER PLATFORM PIPE PILE
24" DIA. X 0.688" W.T.

SCALE: 1" = 0'-10"

NOT FOR CONSTRUCTION

Foth
FOTH INFRASTRUCTURE & ENVIRONMENT, LLC
2514 S 102ND ST
WEST ALLIS, WI 53227

THIS DOCUMENT MAY NOT BE USED WITHOUT THE WRITTEN APPROVAL OF FOTH INFRASTRUCTURE AND ENVIRONMENT, LLC. UNAPPROVED USE IS THE SOLE RESPONSIBILITY OF THE UNAUTHORIZED USER.

IT IS A VIOLATION OF LAW FOR ANY PERSON TO ALTER THIS DOCUMENT UNLESS ACTING UNDER THE DIRECTION OF A LICENSED PROFESSIONAL ENGINEER.

THIS DRAWING WAS PREPARED AT THE GRAPHIC SCALE INDICATED. INACCURACIES IN THE STATED SCALE MAY BE INTRODUCED WHEN DRAWINGS ARE REPRODUCED BY ANY MEANS.

WEC ENERGY GROUP - BUSINESS SERVICES

MILWAUKEE, WISCONSIN

MILWAUKEE ESTUARY DREDGED MATERIAL MANAGEMENT FACILITY

NO.	BY	DATE	DESCRIPTION
1		-	
2		-	
3		-	
4		-	
5		-	
6		-	
7		-	
8		-	

REVISIONS

DATE OF PREPARATION

	BY	DATE
SURVEYED	-	-
DRAWN	MXS	11/05/2020
DESIGNED	MXS	11/05/2020
CHECKED	TSW1	11/08/2020

CORNER PLATFORM PLAN AND SECTIONS

SCALE:

AS NOTED

PROJECT NO: 0019W012

SHEET NUMBER

S18A

Tuesday, May 07, 2019 10:51:01 AM
c:\pw_work\pw_jmaf_user\jmaf1\d0362\s18a.dgn, v=Default

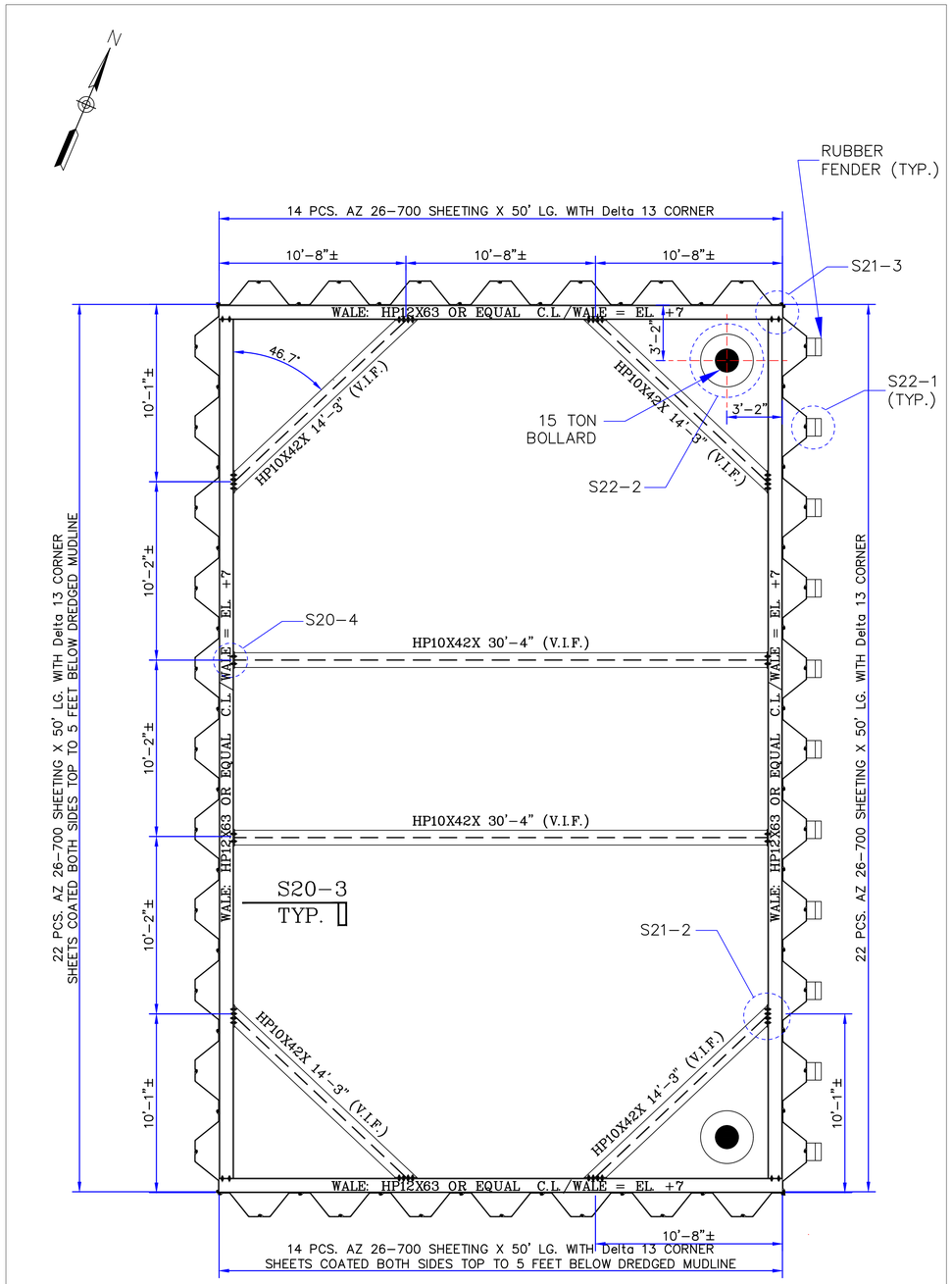

PLAN VIEW P19-1
SHEET PILE OFFLOADING PLATFORM LAYOUT
SCALE 1" = 4'-0"

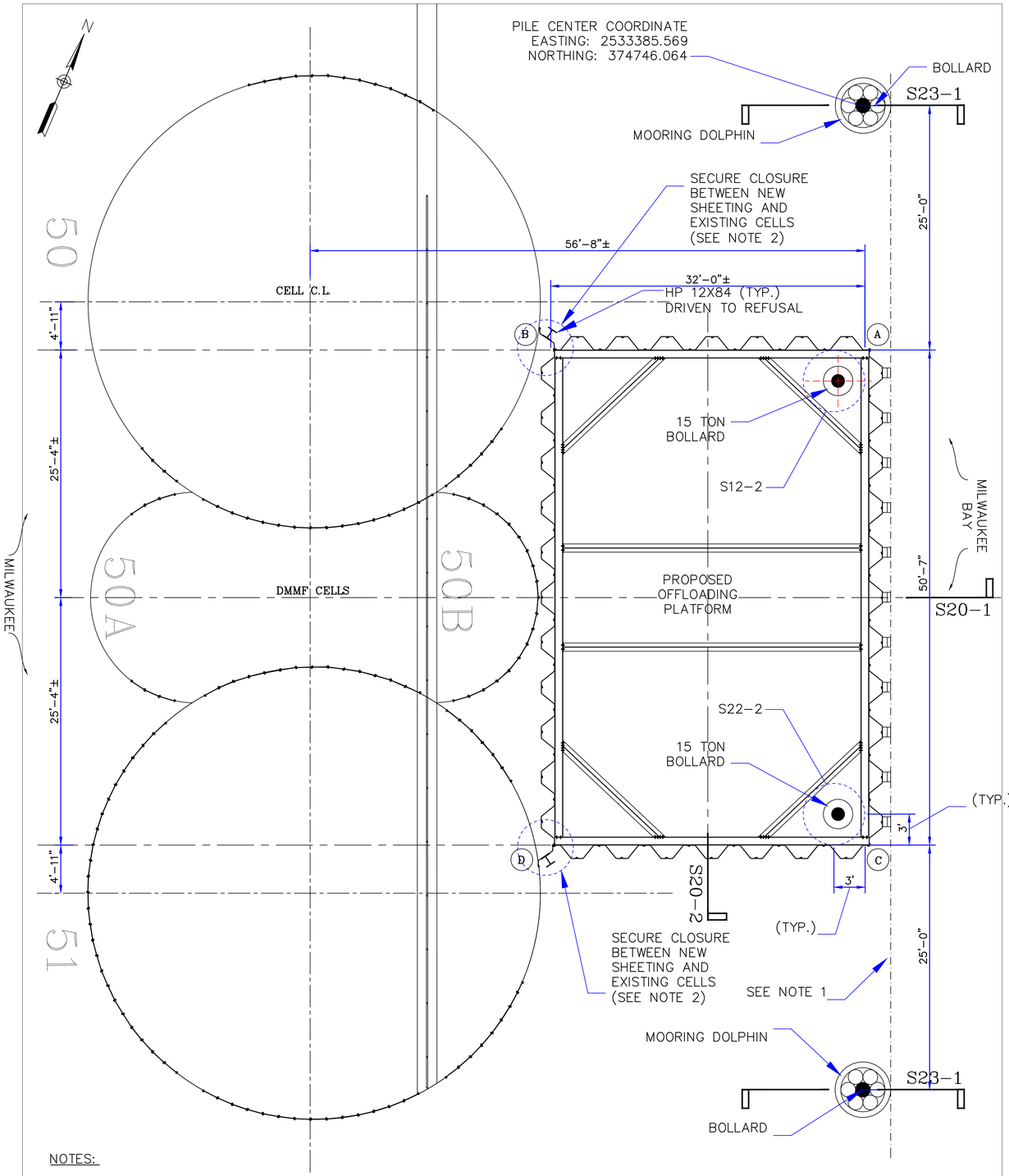

NOTES:

1. MOORING DOLPHINS SHOULD BE OFFSET SO THAT THE FENDERS ON THE SHEET PILE WALL AND DOLPHIN ARE IN STRAIGHT LINE.
2. CLOSURE DETAIL TO BE DETERMINED AFTER SHEETING IS INSTALLED AND SECURED.

PLAN VIEW P19-2
SHEET PILE OFFLOADING PLATFORM LAYOUT
SCALE 1" = 6'-0"

NOTES:
SHEET PILE OFFLOADING PLATFORM IS DESIGNED TO ACCOMMODATE 3000 PSF ON TWO 4 FT X 20 FT TRACK PARALLEL TO THE PLATFORM LENGTH. OR 500 PSF ON THE ENTIRE PLATFORM.

NOT FOR CONSTRUCTION

Foth
FOTH INFRASTRUCTURE & ENVIRONMENT, LLC
15 CREEK ROAD
MARION, MA 02738

THIS DOCUMENT MAY NOT BE USED WITHOUT THE WRITTEN APPROVAL OF FOTH INFRASTRUCTURE AND ENVIRONMENT, LLC. UNAPPROVED USE IS THE SOLE RESPONSIBILITY OF THE UNAUTHORIZED USER.
IT IS A VIOLATION OF LAW FOR ANY PERSON TO ALTER THIS DOCUMENT UNLESS ACTING UNDER THE DIRECTION OF A LICENSED PROFESSIONAL ENGINEER.
THIS DRAWING WAS PREPARED AT THE GRAPHIC SCALE INDICATED. INACCURACIES IN THE STATED SCALE MAY BE INTRODUCED WHEN DRAWINGS ARE REPRODUCED BY ANY MEANS.

WEC ENERGY GROUP - BUSINESS SERVICES
MILWAUKEE, WISCONSIN
MILWAUKEE ESTUARY DREDGED MATERIAL MANAGEMENT FACILITY

REVISIONS			
NO.	BY	DATE	DESCRIPTION

DATE OF PREPARATION

	BY	DATE
SURVEYED	-	-
DRAWN	MXS6	11/05/2020
DESIGNED	MXS6	11/05/2020
CHECKED	TSW1	11/08/2020

OFFLOADING PLATFORM SHEET 1 OF 5

SCALE:
AS NOTED

PROJECT NO: 0019W012

SHEET NUMBER
S19

Tuesday, May 07, 2019 10:51 AM
S:\Projects\Milwaukee\Drawings\Offloading Platform\Offloading Platform.dwg

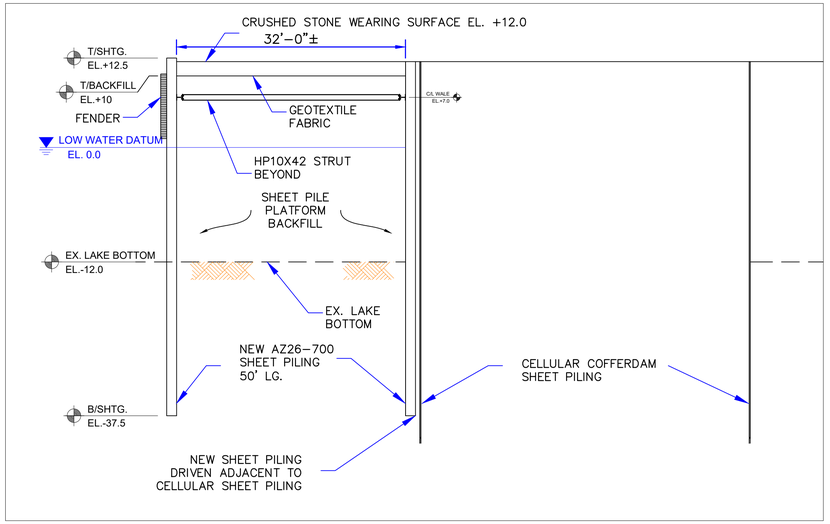

SECTION S20-1
SCALE 1" = 10'-0"

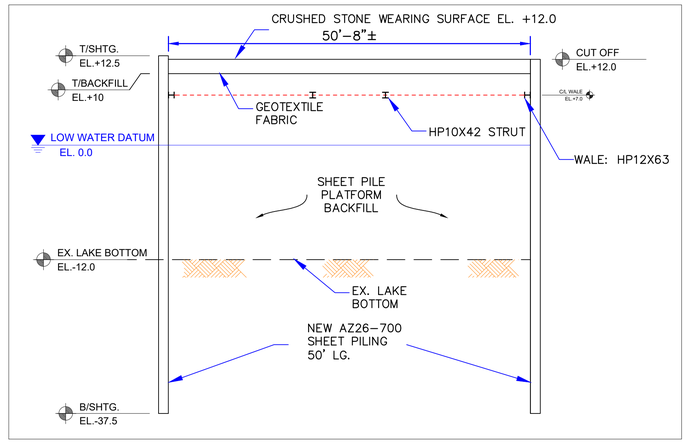

SECTION 20-2
SCALE 1" = 10'-0"

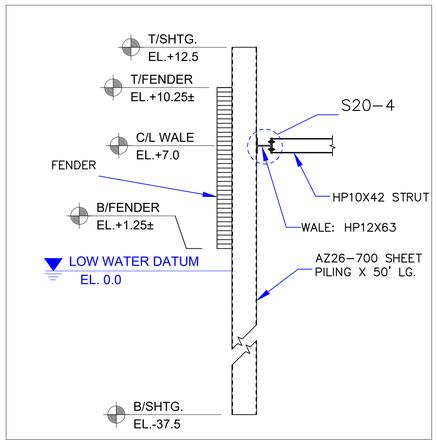

S20-3
SCALE $\frac{1}{4}$" = 1'-0"

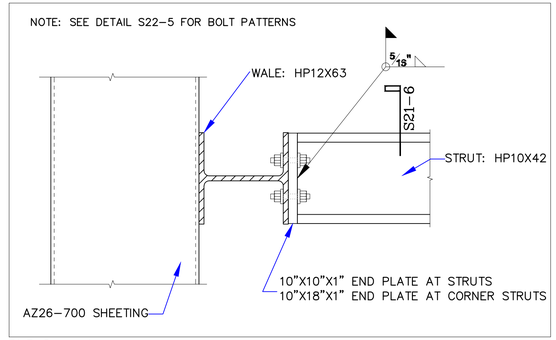

S20-4
WALE/STRUT CONNECTION DETAIL
SCALE 1$\frac{1}{2}$" = 1'-0"

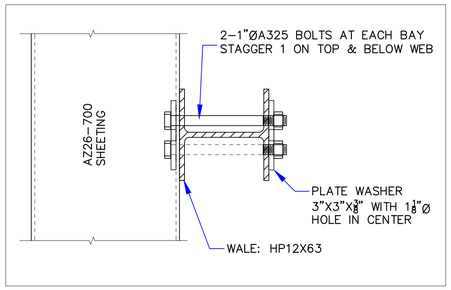

DETAIL S20-5
SHEETING/WALE CONNECTION DETAIL
SCALE 1$\frac{1}{2}$" = 1'-0"

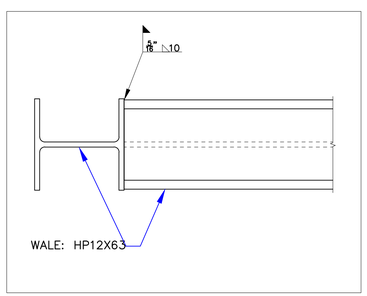

DETAIL S20-6
WALE CORNER DETAIL
SCALE 1$\frac{1}{2}$" = 1'-0"

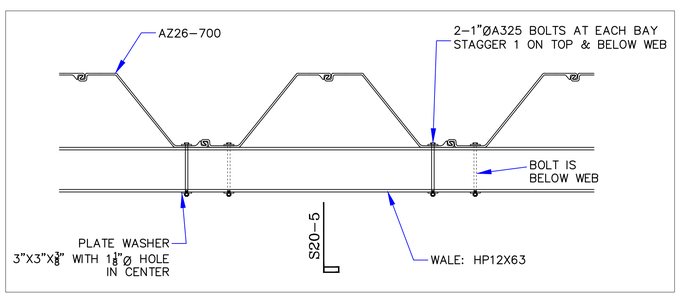

PLAN VIEW S20-7
SCALE $\frac{3}{4}$" = 1'-0"

NOT FOR CONSTRUCTION

Foth
FOTH INFRASTRUCTURE & ENVIRONMENT, LLC
15 CREEK ROAD
MARION, MA 02738

THIS DOCUMENT MAY NOT BE USED WITHOUT THE WRITTEN APPROVAL OF FOTH INFRASTRUCTURE AND ENVIRONMENT, LLC. UNAPPROVED USE IS THE SOLE RESPONSIBILITY OF THE UNAUTHORIZED USER.

IT IS A VIOLATION OF LAW FOR ANY PERSON TO ALTER THIS DOCUMENT UNLESS ACTING UNDER THE DIRECTION OF A LICENSED PROFESSIONAL ENGINEER.

THIS DRAWING WAS PREPARED AT THE GRAPHIC SCALE INDICATED. INACCURACIES IN THE STATED SCALE MAY BE INTRODUCED WHEN DRAWINGS ARE REPRODUCED BY ANY MEANS.

WEC ENERGY GROUP - BUSINESS SERVICES

MILWAUKEE, WISCONSIN

MILWAUKEE ESTUARY DREDGED MATERIAL MANAGEMENT FACILITY

REVISIONS

NO.	BY	DATE	DESCRIPTION
1			
2			
3			
4			
5			
6			
7			
8			

DATE OF PREPARATION

	BY	DATE
SURVEYED	-	-
DRAWN	MXS6	11/05/2020
DESIGNED	MXS6	11/05/2020
CHECKED	TSW1	11/08/2020

OFFLOADING PLATFORM SHEET 2 OF 5

SCALE:
AS NOTED

PROJECT NO: 0019W012

SHEET NUMBER
S20

Tuesday, May 07, 2019 10:51:01 AM
J:\Foth_Work\Active Projects\Wisconsin\WEC Energy Group\0019W012\Drawings\Civil\0019W012-S20.dwg

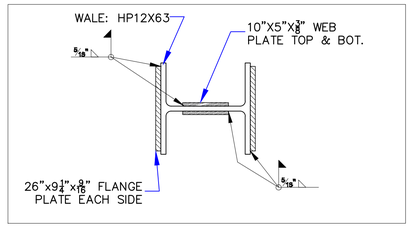

S21–1
WALE SPLICE DETAIL
SCALE 1½" = 1'–0"

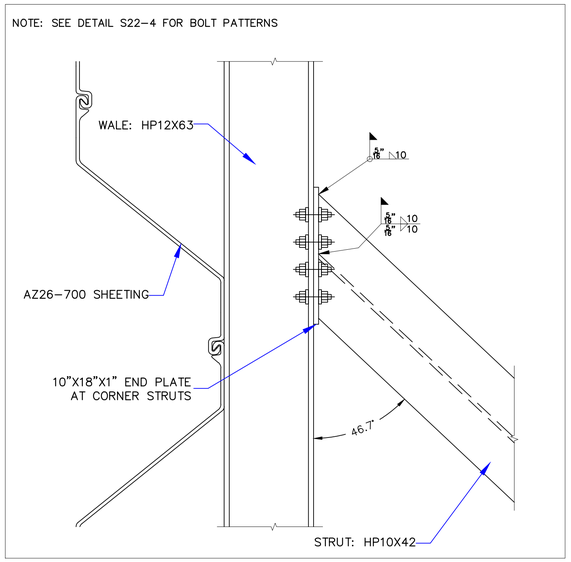

S21–2
WALE/CORNER STRUT CONNECTION DETAIL
SCALE 1½" = 1'–0"

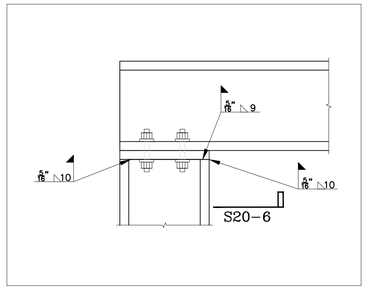

DETAIL S21–3
WALE CORNER DETAIL
SCALE 1½" = 1'–0"

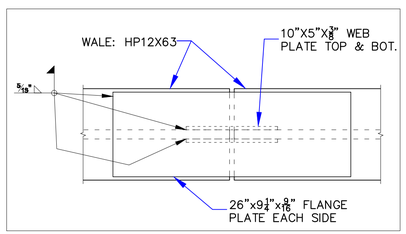

S21–4
WALE SPLICE DETAIL –ELEVATION
SCALE 1½" = 1'–0"

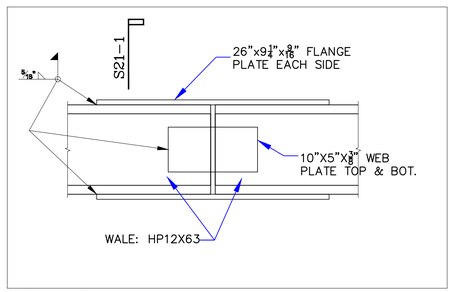

S21–5
WALE SPLICE DETAIL–PLAN
SCALE 1½" = 1'–0"

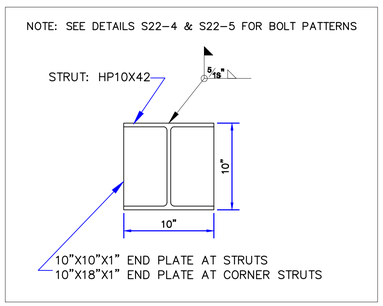

S21–6
STRUT/END PLATE DETAIL
SCALE 1½" = 1'–0"

NOT FOR CONSTRUCTION

Foth
FOTH INFRASTRUCTURE & ENVIRONMENT, LLC
15 CREEK ROAD
MARION, MA 02738

THIS DOCUMENT MAY NOT BE USED WITHOUT THE WRITTEN APPROVAL OF FOTH INFRASTRUCTURE AND ENVIRONMENT, LLC. UNAPPROVED USE IS THE SOLE RESPONSIBILITY OF THE UNAUTHORIZED USER.

IT IS A VIOLATION OF LAW FOR ANY PERSON TO ALTER THIS DOCUMENT UNLESS ACTING UNDER THE DIRECTION OF A LICENSED PROFESSIONAL ENGINEER.

THIS DRAWING WAS PREPARED AT THE GRAPHIC SCALE INDICATED. INACCURACIES IN THE STATED SCALE MAY BE INTRODUCED WHEN DRAWINGS ARE REPRODUCED BY ANY MEANS.

WEC ENERGY GROUP - BUSINESS SERVICES

MILWAUKEE, WISCONSIN

MILWAUKEE ESTUARY DREDGED MATERIAL MANAGEMENT FACILITY

REVISIONS			
NO.	BY	DESCRIPTION	DATE
1			-
2			-
3			-
4			-
5			-
6			-
7			-

DATE OF PREPARATION

	BY	DATE
SURVEYED	-	-
DRAWN	MXS6	11/05/2020
DESIGNED	MXS6	11/05/2020
CHECKED	TSW1	11/08/2020

OFFLOADING PLATFORM
SHEET 3 OF 5

SCALE:
AS NOTED

PROJECT NO: 0019W012

SHEET NUMBER
S21

Tuesday, May 04, 2021 11:01:01 AM
S:\Foth_Active_Projects\0019W012\Graphics\Sheets\S21.dwg

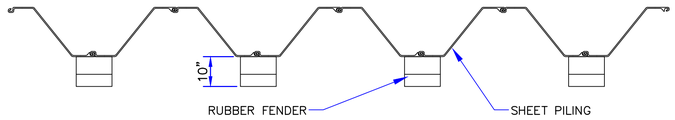

PLAN VIEW

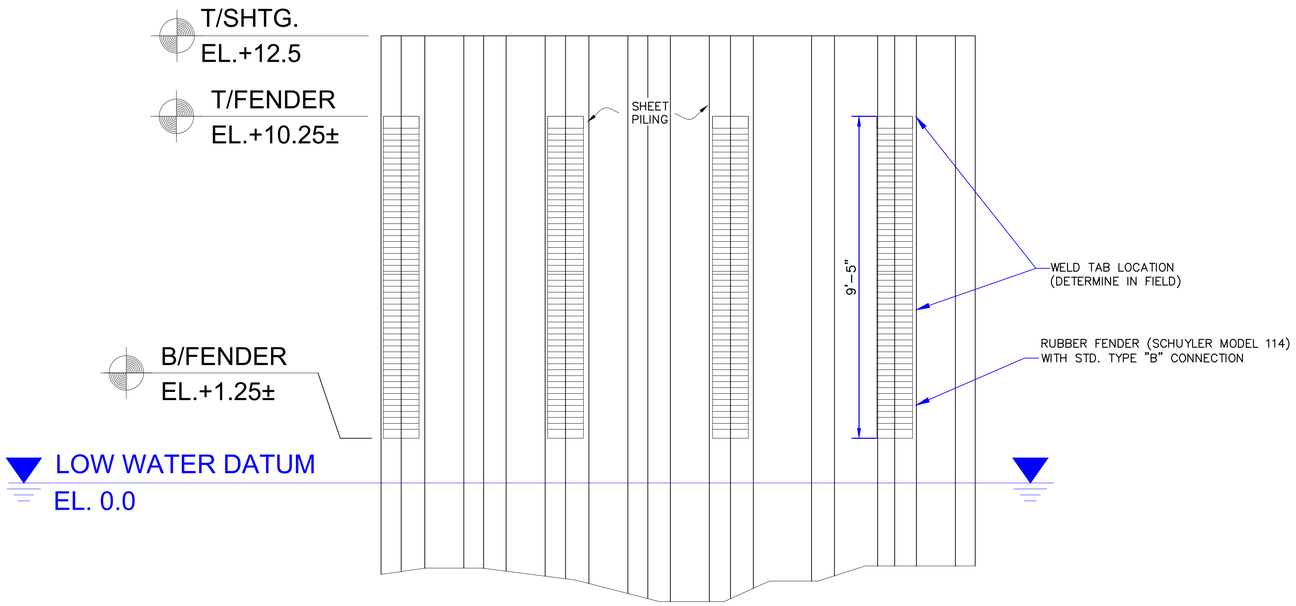

ELEVATION

S22-1
SHEET PILE FENDER DETAIL
SCALE 1/2" = 1'-0"

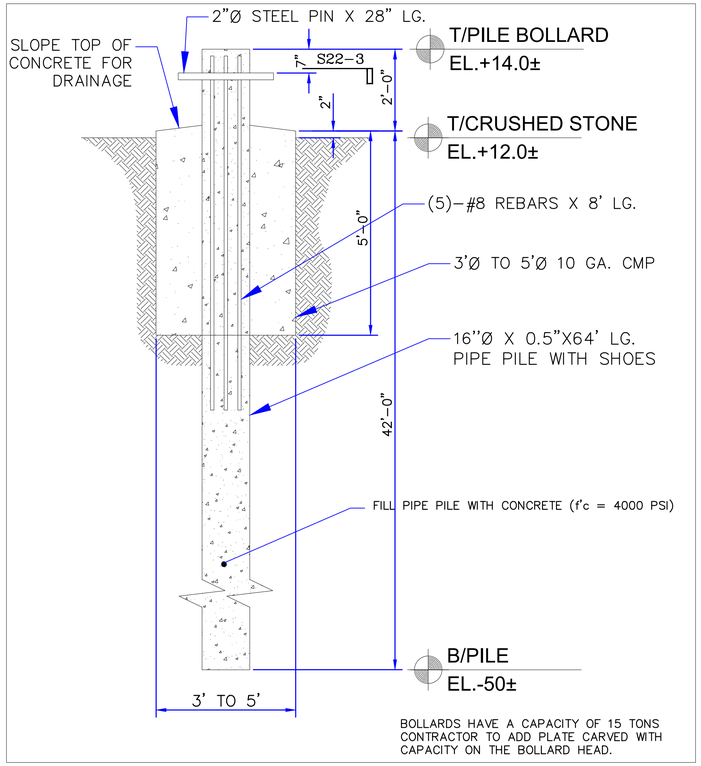

S22-2
PIPE PILE BOLLARD DETAIL
SCALE 1/2" = 1'-0"

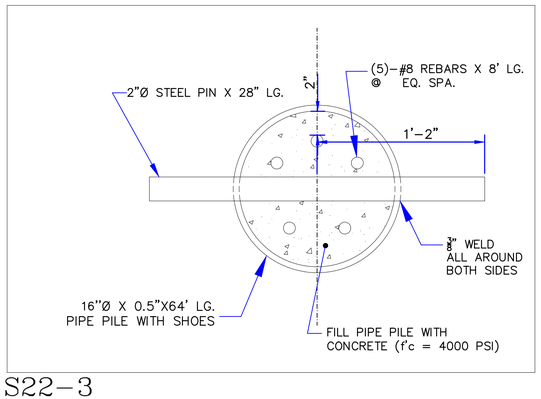

S22-3
PIPE PILE BOLLARD DETAIL
SCALE 2" = 1'-0"

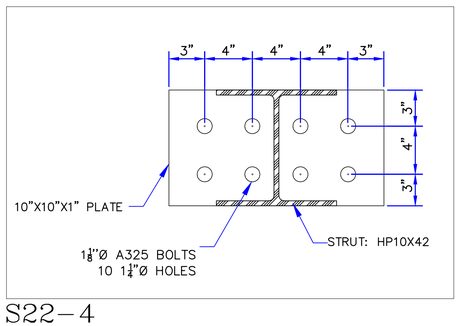

S22-4
CORNER STRUT END PLATE DETAIL
SCALE 2" = 1'-0"

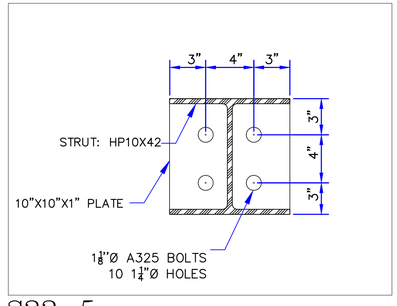

S22-5
STRUT END PLATE DETAIL
SCALE 2" = 1'-0"

NOT FOR CONSTRUCTION

Foth
FOTH INFRASTRUCTURE & ENVIRONMENT, LLC
15 CREEK ROAD
MARION, MA 02738

THIS DOCUMENT MAY NOT BE USED WITHOUT THE WRITTEN APPROVAL OF FOTH INFRASTRUCTURE AND ENVIRONMENT, LLC. UNAPPROVED USE IS THE SOLE RESPONSIBILITY OF THE UNAUTHORIZED USER.
IT IS A VIOLATION OF LAW FOR ANY PERSON TO ALTER THIS DOCUMENT UNLESS ACTING UNDER THE DIRECTION OF A LICENSED PROFESSIONAL ENGINEER.
THIS DRAWING WAS PREPARED AT THE GRAPHIC SCALE INDICATED. INACCURACIES IN THE STATED SCALE MAY BE INTRODUCED WHEN DRAWINGS ARE REPRODUCED BY ANY MEANS.

WEC ENERGY GROUP -
BUSINESS SERVICES
MILWAUKEE, WISCONSIN

MILWAUKEE ESTUARY DREDGED
MATERIAL MANAGEMENT FACILITY

REVISIONS			
NO.	BY	DATE	DESCRIPTION

DATE OF PREPARATION

	BY	DATE
SURVEYED	-	-
DRAWN	MXS6	11/05/2020
DESIGNED	MXS6	11/05/2020
CHECKED	TSW1	11/08/2020

OFFLOADING PLATFORM
SHEET 4 OF 5

SCALE:
AS NOTED

PROJECT NO: 0019W012

SHEET NUMBER
S22

Tuesday, May 07, 2019 7:51 AM

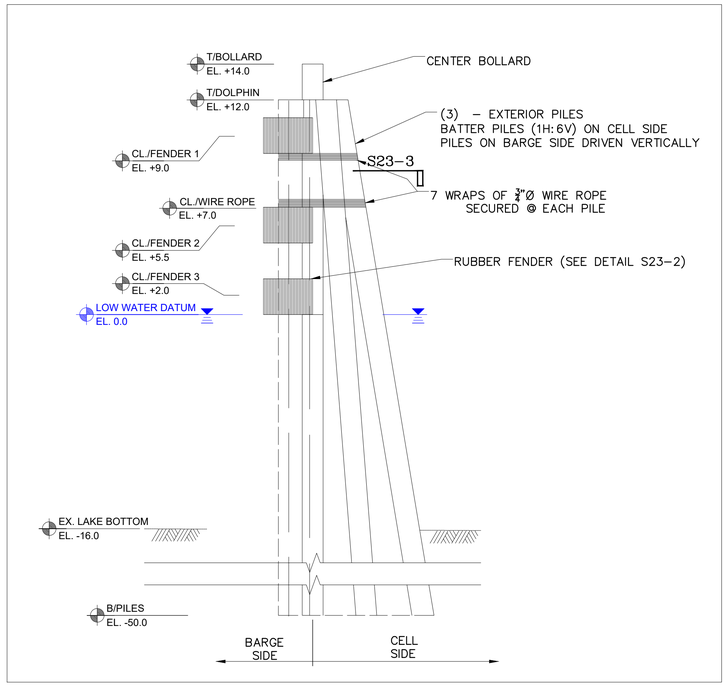

S23-1
MOORING DOLPHIN DETAILS
SCALE 1/4" = 1'-0"

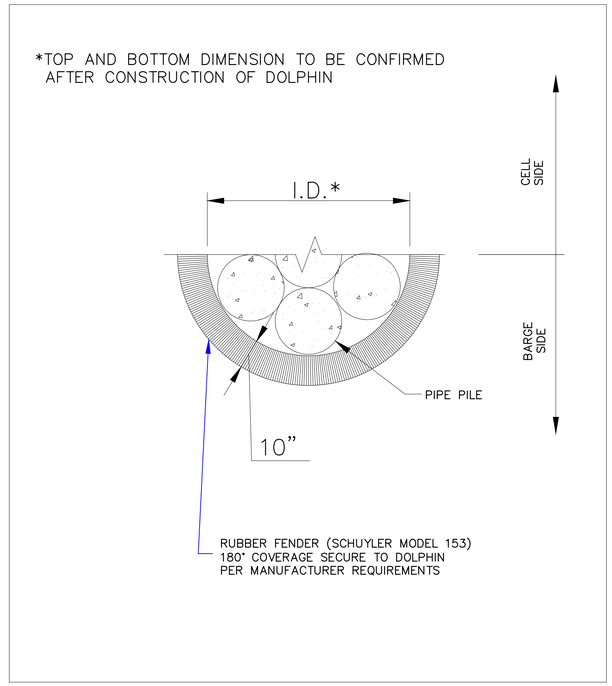

S23-2
DOLPHIN FENDER DETAIL
SCALE 1" = 1'-0"

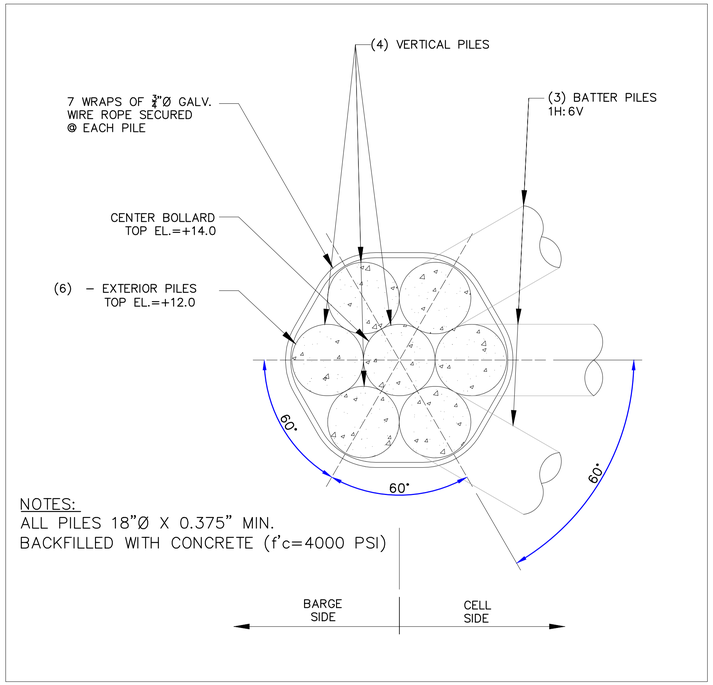

S23-3
MOORING DOLPHIN SECTION
SCALE 1" = 1'-0"

NOT FOR CONSTRUCTION

Foth
FOTH INFRASTRUCTURE & ENVIRONMENT, LLC
15 CREEK ROAD
MARION, MA 02738

THIS DOCUMENT MAY NOT BE USED WITHOUT THE WRITTEN APPROVAL OF FOTH INFRASTRUCTURE AND ENVIRONMENT, LLC. UNAPPROVED USE IS THE SOLE RESPONSIBILITY OF THE UNAUTHORIZED USER.

IT IS A VIOLATION OF LAW FOR ANY PERSON TO ALTER THIS DOCUMENT UNLESS ACTING UNDER THE DIRECTION OF A LICENSED PROFESSIONAL ENGINEER.

THIS DRAWING WAS PREPARED AT THE GRAPHIC SCALE INDICATED. INACCURACIES IN THE STATED SCALE MAY BE INTRODUCED WHEN DRAWINGS ARE REPRODUCED BY ANY MEANS.

WEC ENERGY GROUP - BUSINESS SERVICES
MILWAUKEE, WISCONSIN
MILWAUKEE ESTUARY DREDGED MATERIAL MANAGEMENT FACILITY

REVISIONS			
NO.	BY	DATE	DESCRIPTION

DATE OF PREPARATION

	BY	DATE
SURVEYED	-	-
DRAWN	MXS6	11/05/2020
DESIGNED	MXS6	11/05/2020
CHECKED	TSW1	11/08/2020

OFFLOADING PLATFORM
SHEET 5 OF 5

SCALE:
AS NOTED

PROJECT NO: 0019W012

SHEET NUMBER
S23

Tuesday, May 07, 2019 7:51:01 AM

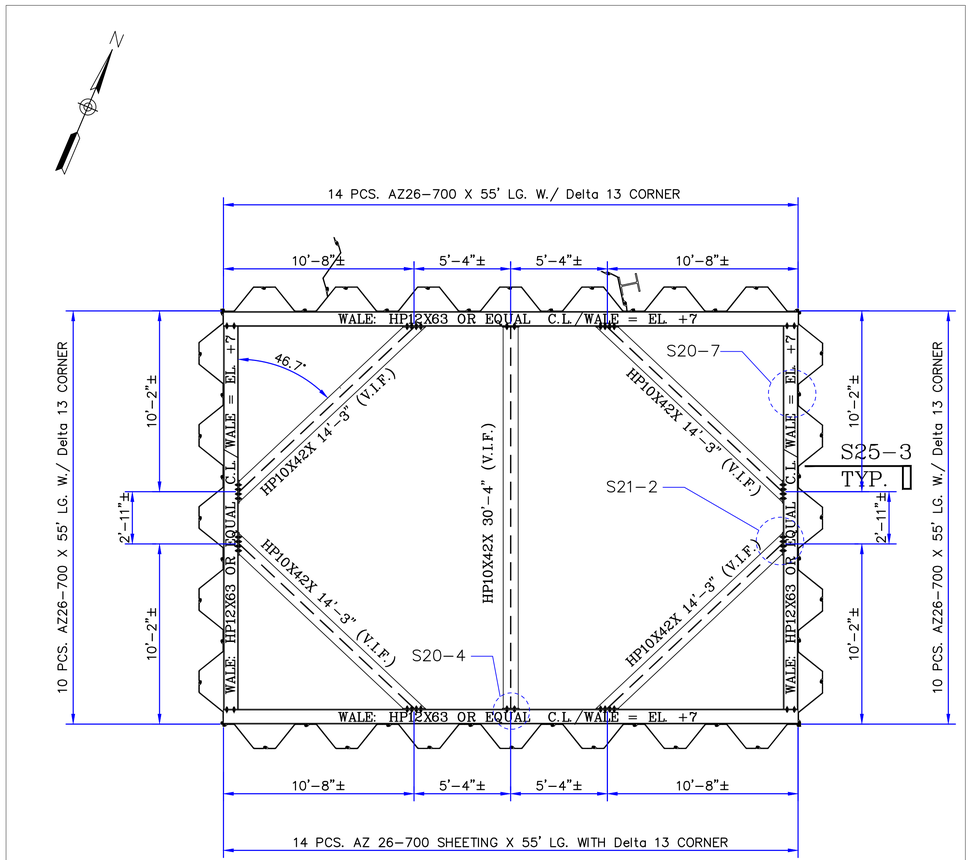

PLAN VIEW P24-1
SHEET PILE DMMF-DMDF CONNECTOR PLATFORM LAYOUT
SCALE 1" = 4'-0"

NOTES:
1. SHEET PILE CONNECTION PLATFORM IS DESIGNED FOR DREDGED DEPTH OF -15 FT LWD.
2. ALL SHEET PILES SHALL BE COATED BOTH SIDES, TOP TO 5 FEET BELOW DESIGN DREDGED MUDLINE.
3. NOT ALL PS SHEETS ARE SHOWN.

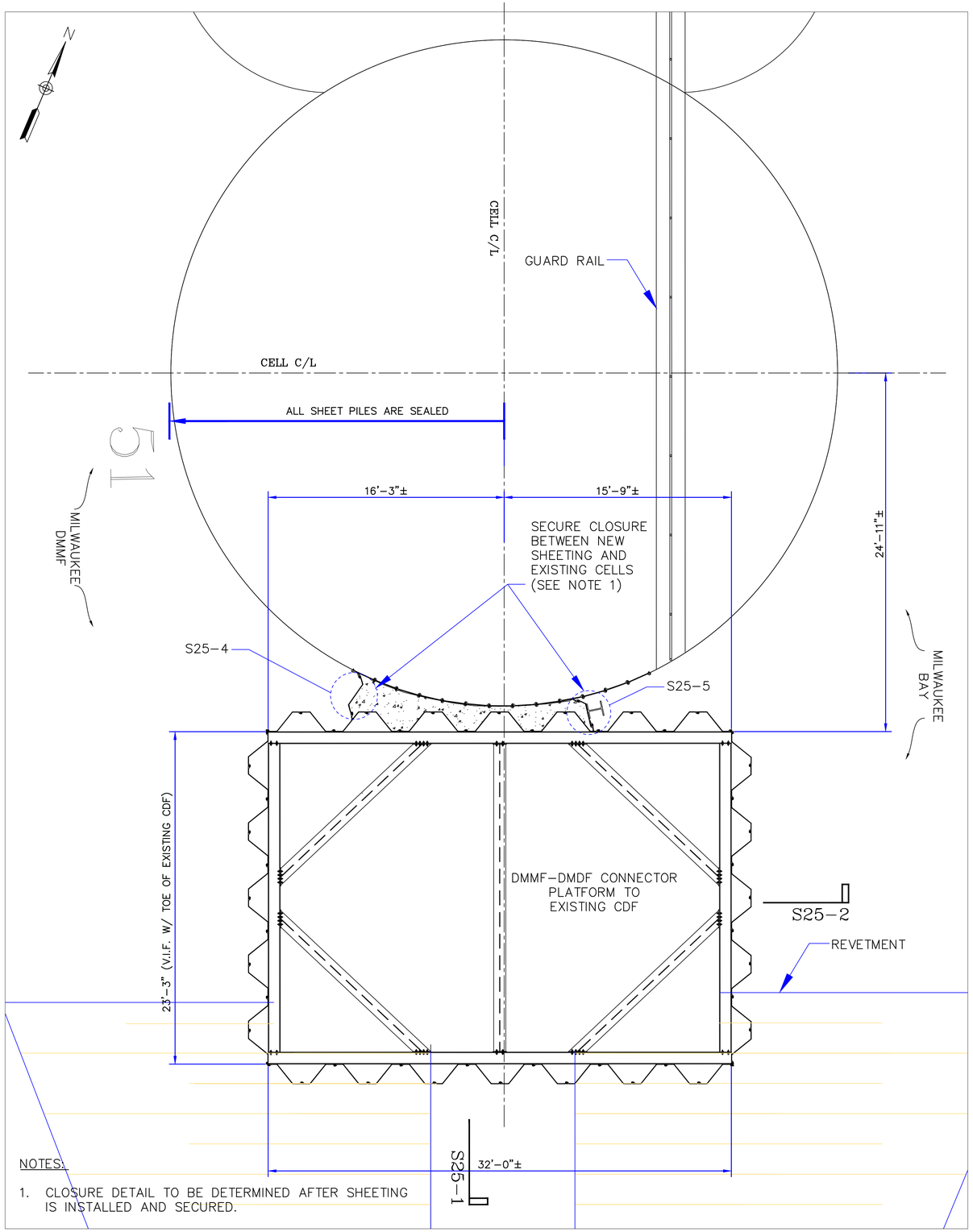

NOTES:
1. CLOSURE DETAIL TO BE DETERMINED AFTER SHEETING IS INSTALLED AND SECURED.

PLAN VIEW P24-2
SHEET PILE DMMF-DMDF CONNECTOR PLATFORM LAYOUT
SCALE 1" = 4'-0"

NOT FOR CONSTRUCTION

Foth
FOTH INFRASTRUCTURE & ENVIRONMENT, LLC
15 CREEK ROAD
MARION, MA 02738

THIS DOCUMENT MAY NOT BE USED WITHOUT THE WRITTEN APPROVAL OF FOTH INFRASTRUCTURE AND ENVIRONMENT, LLC. UNAPPROVED USE IS THE SOLE RESPONSIBILITY OF THE UNAUTHORIZED USER.

IT IS A VIOLATION OF LAW FOR ANY PERSON TO ALTER THIS DOCUMENT UNLESS ACTING UNDER THE DIRECTION OF A LICENSED PROFESSIONAL ENGINEER.

THIS DRAWING WAS PREPARED AT THE GRAPHIC SCALE INDICATED. INACCURACIES IN THE STATED SCALE MAY BE INTRODUCED WHEN DRAWINGS ARE REPRODUCED BY ANY MEANS.

WEC ENERGY GROUP - BUSINESS SERVICES
MILWAUKEE, WISCONSIN

MILWAUKEE ESTUARY DREDGED MATERIAL MANAGEMENT FACILITY

REVISIONS

NO.	BY	DATE	DESCRIPTION
1		-	
2		-	
3		-	
4		-	
5		-	
6		-	
7		-	

DATE OF PREPARATION

	BY	DATE
SURVEYED	-	-
DRAWN	MXS6	11/05/2020
DESIGNED	MXS6	11/05/2020
CHECKED	TSW1	11/08/2020

DMMF-DMDF CONNECTOR
SHEET 1 OF 3

SCALE:
AS NOTED

PROJECT NO: 0019W012

SHEET NUMBER
S24

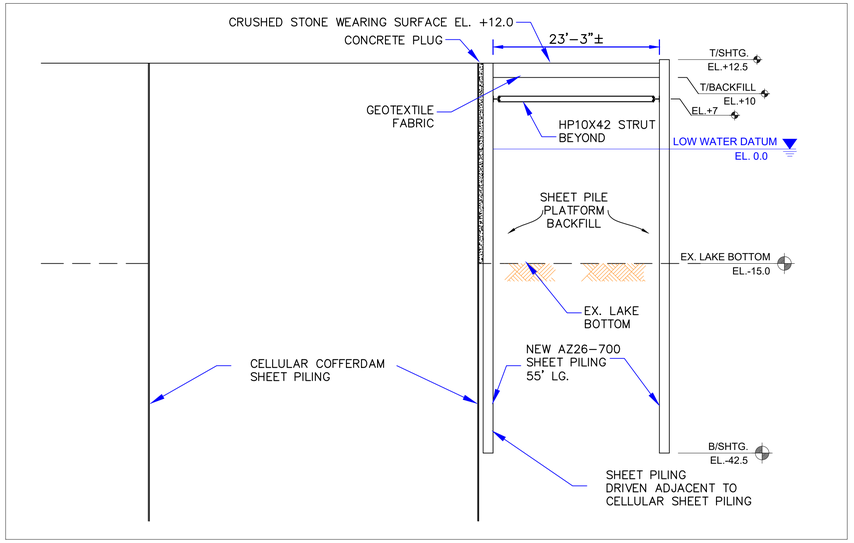

SECTION S25-1
SCALE 1" = 10'-0"

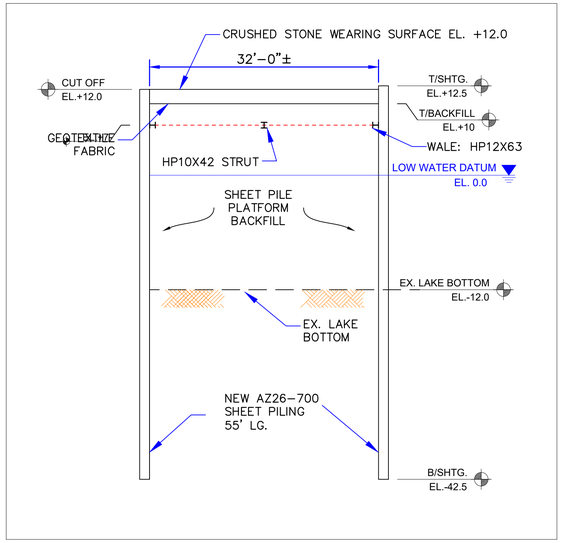

SECTION 25-2
SCALE 1" = 10'-0"

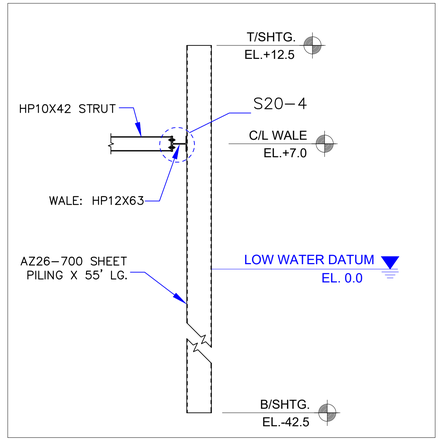

S20-3
SCALE 1/4" = 1'-0"

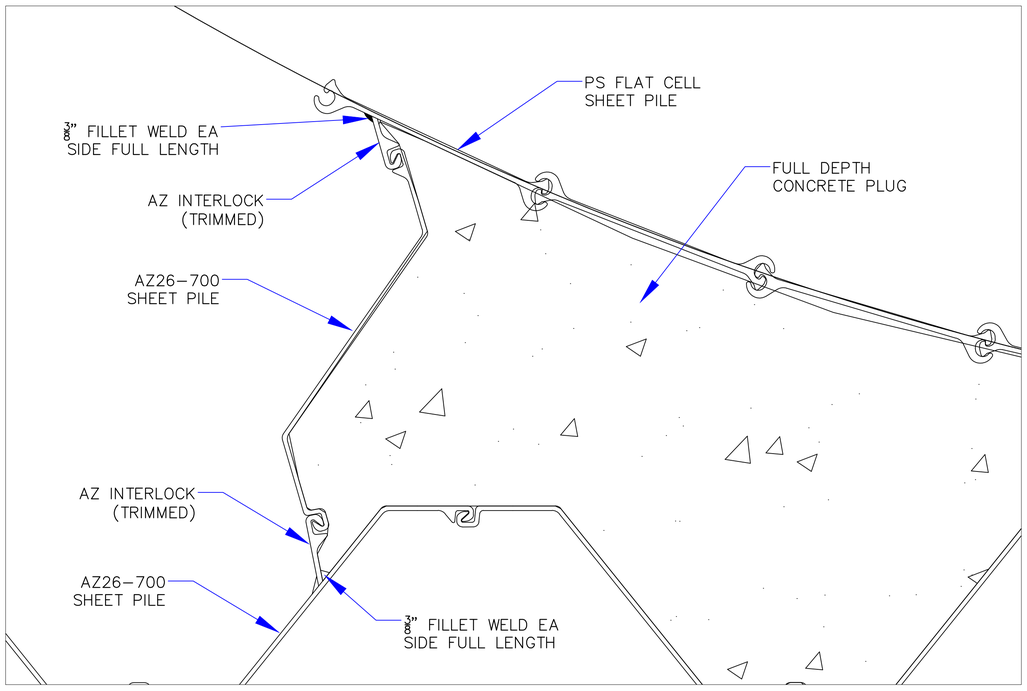

SECTION 25-4
SCALE 2" = 1'-0"

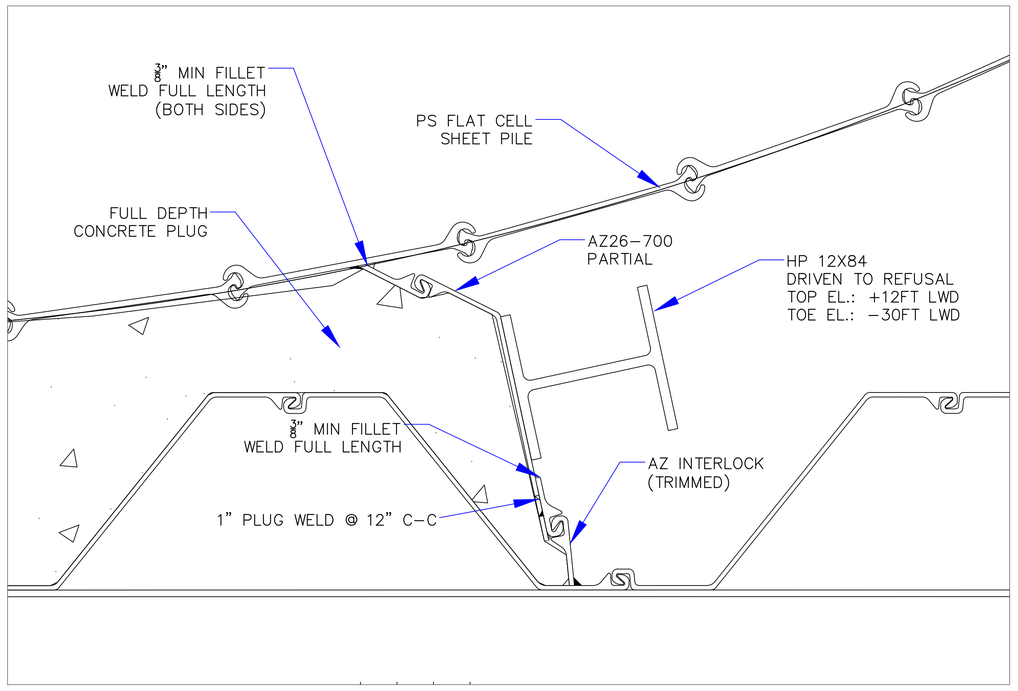

SECTION 25-5
SCALE 2" = 1'-0"

NOT FOR CONSTRUCTION

FOTH INFRASTRUCTURE & ENVIRONMENT, LLC
15 CREEK ROAD
MARION, MA 02738

THIS DOCUMENT MAY NOT BE USED WITHOUT THE WRITTEN APPROVAL OF FOTH INFRASTRUCTURE AND ENVIRONMENT, LLC. UNAPPROVED USE IS THE SOLE RESPONSIBILITY OF THE UNAUTHORIZED USER.

IT IS A VIOLATION OF LAW FOR ANY PERSON TO ALTER THIS DOCUMENT UNLESS ACTING UNDER THE DIRECTION OF A LICENSED PROFESSIONAL ENGINEER.

THIS DRAWING WAS PREPARED AT THE GRAPHIC SCALE INDICATED. INACCURACIES IN THE STATED SCALE MAY BE INTRODUCED WHEN DRAWINGS ARE REPRODUCED BY ANY MEANS.

WEC ENERGY GROUP - BUSINESS SERVICES
MILWAUKEE, WISCONSIN

MILWAUKEE ESTUARY DREDGED MATERIAL MANAGEMENT FACILITY

REVISIONS

NO.	BY	DATE	DESCRIPTION
1		-	
2		-	
3		-	
4		-	
5		-	
6		-	
7		-	

DATE OF PREPARATION

	BY	DATE
SURVEYED	-	-
DRAWN	MXS6	11/05/2020
DESIGNED	MXS6	11/05/2020
CHECKED	TSW1	11/08/2020

DMMF-DMDF CONNECTOR
SHEET 2 OF 3

SCALE:
AS NOTED

PROJECT NO: 0019W012

SHEET NUMBER
S25

Tuesday, May 07, 2019 10:31 AM
k:\tw_work\final_drwg_sub\S25\DMDF&DMMF\dwg\DMMFDMDFConnector.dwg

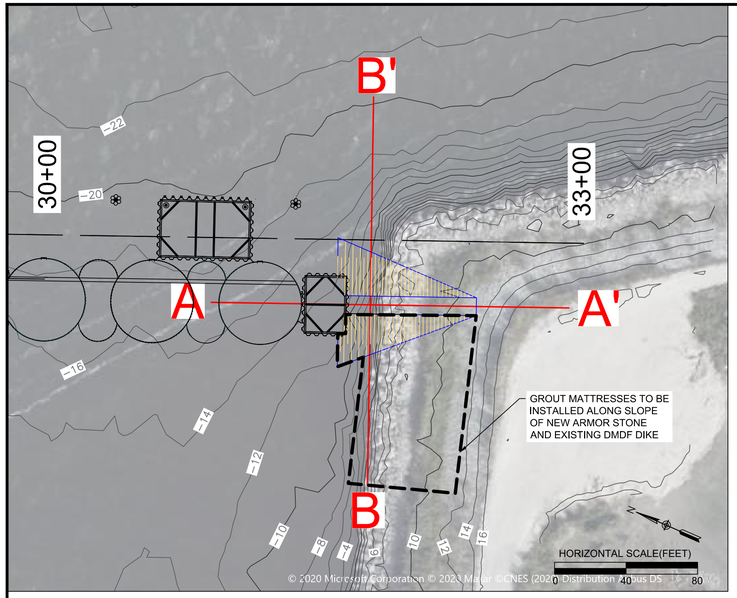

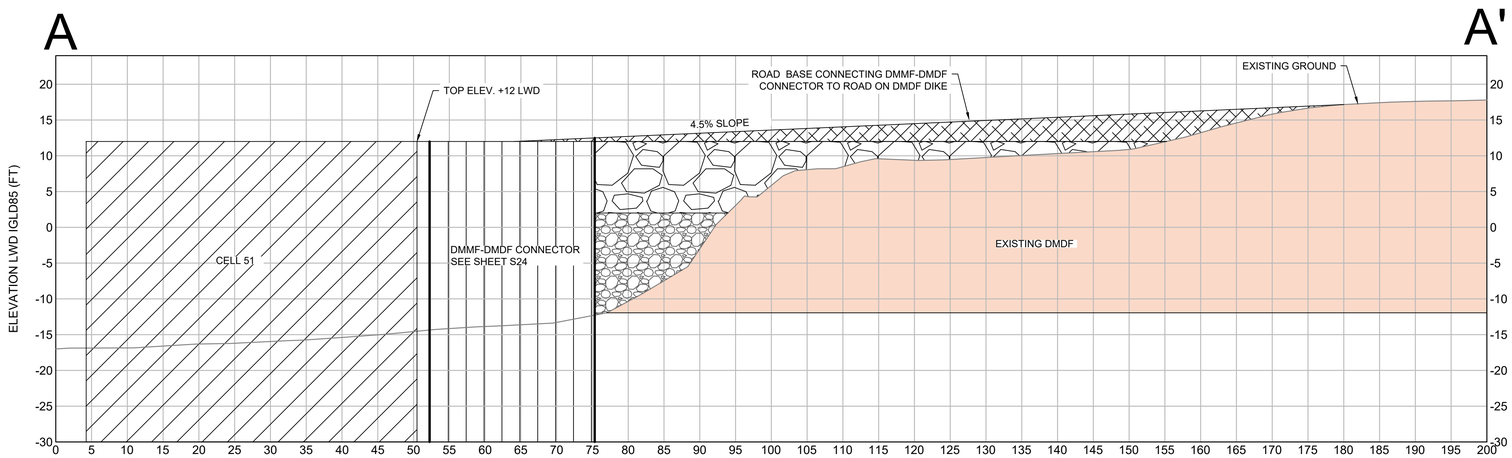

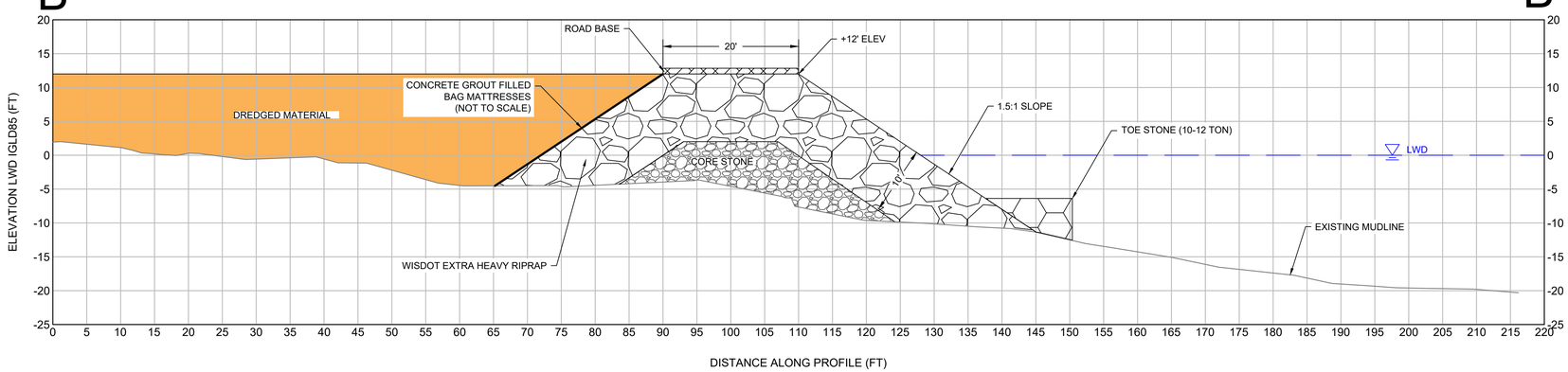

NOT FOR CONSTRUCTION

Tuesday, May 07, 2019 7:51:01 AM
c:\pw_workdir\pw_tehd_dms\d0023758\s26 - rubble mound tie in sections.dwg

Foth
FOTH INFRASTRUCTURE & ENVIRONMENT, LLC
2514 S 102ND ST
WEST ALLIS, WI 53227

THIS DOCUMENT MAY NOT BE USED WITHOUT THE WRITTEN APPROVAL OF FOTH INFRASTRUCTURE AND ENVIRONMENT, LLC. UNAPPROVED USE IS THE SOLE RESPONSIBILITY OF THE UNAUTHORIZED USER.

IT IS A VIOLATION OF LAW FOR ANY PERSON TO ALTER THIS DOCUMENT UNLESS ACTING UNDER THE DIRECTION OF A LICENSED PROFESSIONAL ENGINEER.

THIS DRAWING WAS PREPARED AT THE GRAPHIC SCALE INDICATED. INACCURACIES IN THE STATED SCALE MAY BE INTRODUCED WHEN DRAWINGS ARE REPRODUCED BY ANY MEANS.

WEC ENERGY GROUP - BUSINESS SERVICES

MILWAUKEE, WISCONSIN

MILWAUKEE ESTUARY DREDGED MATERIAL MANAGEMENT FACILITY

REVISIONS

NO.	BY	DATE	DESCRIPTION
1		-	
2		-	
3		-	
4		-	
5		-	
6		-	
7		-	

DATE OF PREPARATION

	BY	DATE
SURVEYED	-	-
DRAWN	JRS6	11/05/2020
DESIGNED	TSW1	11/05/2020
CHECKED	SDG	11/08/2020

DMMF-DMDF CONNECTOR SHEET 3 OF 3

SCALE:
AS NOTED

PROJECT NO: 0019W012

SHEET NUMBER
S26

NOTES:
1. ALL CONTOURS SHOWN ARE EXISTING GRADES.
2. SEE SHEET G02 & G03 FOR GENERAL NOTES

© 2020 Microsoft Corporation © 2020 Maxar ©CNES (2020) Distribution Airbus DS

NOT FOR CONSTRUCTION

Foth
FOTH INFRASTRUCTURE & ENVIRONMENT, LLC
2514 S 102ND ST
WEST ALLIS, WI 53227

THIS DOCUMENT MAY NOT BE USED WITHOUT THE WRITTEN APPROVAL OF FOTH INFRASTRUCTURE AND ENVIRONMENT, LLC. UNAPPROVED USE IS THE SOLE RESPONSIBILITY OF THE UNAUTHORIZED USER.

IT IS A VIOLATION OF LAW FOR ANY PERSON TO ALTER THIS DOCUMENT UNLESS ACTING UNDER THE DIRECTION OF A LICENSED PROFESSIONAL ENGINEER.

THIS DRAWING WAS PREPARED AT THE GRAPHIC SCALE INDICATED. INACCURACIES IN THE STATED SCALE MAY BE INTRODUCED WHEN DRAWINGS ARE REPRODUCED BY ANY MEANS.

WEC ENERGY GROUP - BUSINESS SERVICES

MILWAUKEE, WISCONSIN

MILWAUKEE ESTUARY DREDGED MATERIAL MANAGEMENT FACILITY

REVISIONS

NO.	BY	DATE	DESCRIPTION
1		-	
2		-	
3		-	
4		-	
5		-	
6		-	
7		-	

DATE OF PREPARATION

	BY	DATE
SURVEYED	-	-
DRAWN	JRS6	11/05/2020
DESIGNED	TSW1	11/05/2020
CHECKED	SDG	11/08/2020

WATER CONTROL STRUCTURES

HORIZONTAL SCALE(FEET)
0 150 300

PROJECT NO: 0019W012

SHEET NUMBER
S27

Tuesday, May 07, 2019 10:51:01 AM
U:\pw_work\pw_active\0019W012\Civil\Sheets\0019W012-water control structures.dwg

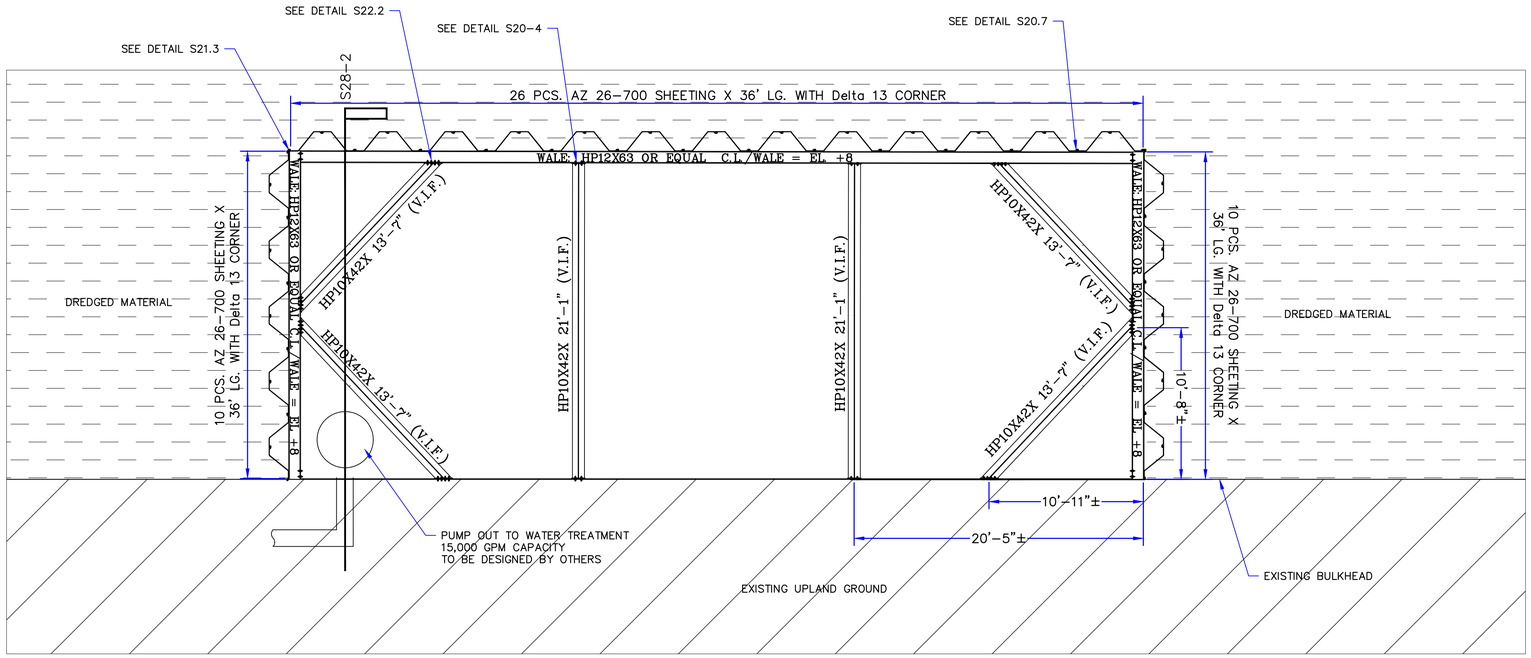

DETAIL S28-1
WEIR LAYOUT
SCALE 1" = 5'

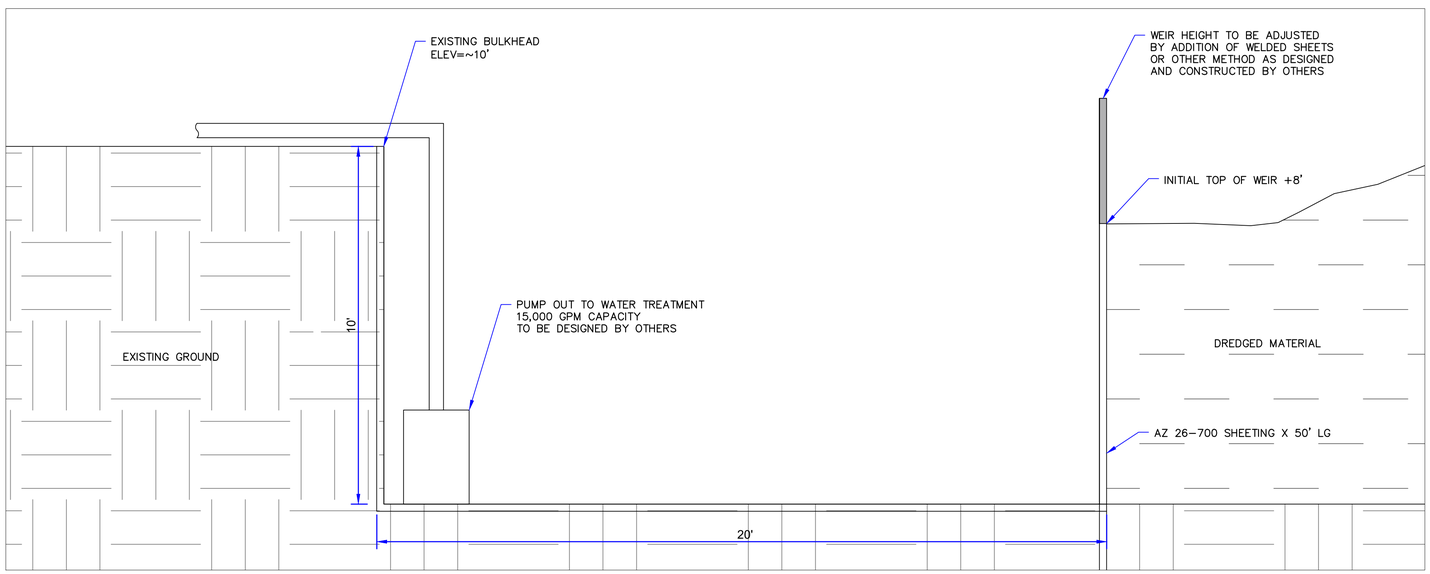

SECTION S28-2
WEIR SECTION
SCALE 1" = 2'

NOT FOR CONSTRUCTION

FOTH INFRASTRUCTURE & ENVIRONMENT, LLC
2514 S 102ND ST
WEST ALLIS, WI 53227

THIS DOCUMENT MAY NOT BE USED WITHOUT THE WRITTEN APPROVAL OF FOTH INFRASTRUCTURE AND ENVIRONMENT, LLC. UNAPPROVED USE IS THE SOLE RESPONSIBILITY OF THE UNAUTHORIZED USER.

IT IS A VIOLATION OF LAW FOR ANY PERSON TO ALTER THIS DOCUMENT UNLESS ACTING UNDER THE DIRECTION OF A LICENSED PROFESSIONAL ENGINEER.

THIS DRAWING WAS PREPARED AT THE GRAPHIC SCALE INDICATED. INACCURACIES IN THE STATED SCALE MAY BE INTRODUCED WHEN DRAWINGS ARE REPRODUCED BY ANY MEANS.

WEC ENERGY GROUP - BUSINESS SERVICES

MILWAUKEE, WISCONSIN

MILWAUKEE ESTUARY DREDGED MATERIAL MANAGEMENT FACILITY

NO.	BY	DATE	DESCRIPTION
1		-	
2		-	
3		-	
4		-	
5		-	
6		-	
7		-	
8		-	

REVISIONS

DATE OF PREPARATION

	BY	DATE
SURVEYED	-	-
DRAWN	JRS6	11/05/2020
DESIGNED	TSW1	11/05/2020
CHECKED	SDG	11/08/2020

WEIR DETAIL AND SECTION

SCALE:
AS NOTED

PROJECT NO: 0019W012

SHEET NUMBER
S28

Tuesday, May 07, 2019 7:51:01 AM
c:\pw_workdir\pw_kelly.t\d0223758\s28_-_weir detail and section.dwg

APPENDIX A2 UNIFORM SETTLEMENT

Consolidation of DMMF Foundation at Design Mudline Elevation

CONSTANT INPUTS			
Par.	*Value*	*Unit*	*Source*
σ_{pc}	0.74	***ksf***	min
B	2000	***ft***	Design
γ_{sub}	0.085	***kcf***	median
γ_w	62.4	**pcf**	Water Density
Δσ	0.5	**ksf**	Design Surcharge
e_0	0.72	**-**	median
Cc	0.1925	**-**	median
Cr	0.025	**-**	median
H	5	**ft**	Incremental Depth

$$\Delta e := C_c \cdot \log\left(\frac{\sigma_{o+\Delta\sigma}}{\sigma_o}\right)$$

$$\sum_{layer\ n}^{layer\ 1} S = \frac{C_{(c\ or\ r)}\ H}{1+e_0}\ \log_{10}\left(\frac{p_0 + \Delta p_{1\ to\ n}}{p_0}\right)$$

D	Z	B'	Δσ	σ_{pc}	σ_0	σ_T	Δe_z	S_z	LWD	
0	0	2000	0.50	0.74	0.00	0.50	0.00000	0.00000	-27	~mudline
5	5	2005	0.50	1.17	0.43	0.92	0.00843	0.50660	-32	
10	10	2010	0.50	1.59	0.85	1.35	0.00500	0.30047	-37	
15	15	2015	0.50	2.02	1.28	1.77	0.00357	0.21432	-42	
20	20	2020	0.50	2.44	1.70	2.20	0.00277	0.16659	-47	
25	25	2025	0.49	2.87	2.13	2.62	0.00227	0.13618	-52	~cell bottom
30	30	2030	0.49	3.29	2.55	3.04	0.00192	0.11510	-57	
35	35	2035	0.49	3.72	2.98	3.47	0.00166	0.09962	-62	
40	40	2040	0.49	4.14	3.40	3.89	0.00146	0.08776	-67	
45	45	2045	0.49	4.57	3.83	4.31	0.00131	0.07839	-72	
50	50	2050	0.49	4.99	4.25	4.74	0.00118	0.07080	-77	
55	55	2055	0.49	5.42	4.68	5.16	0.00108	0.06452	-82	
60	60	2060	0.49	5.84	5.10	5.59	0.00099	0.05924	-87	
65	65	2065	0.48	6.27	5.53	6.01	0.00091	0.05474	-92	
70	70	2070	0.48	6.69	5.95	6.43	0.00085	0.05086	-97	
75	75	2075	0.48	7.12	6.38	6.86	0.00079	0.04748	-102	
80	80	2080	0.48	7.54	6.80	7.28	0.00074	0.04451	-107	
85	85	2085	0.48	7.97	7.23	7.70	0.00070	0.04188	-112	
90	90	2090	0.48	8.39	7.65	8.13	0.00066	0.03953	-117	
95	95	2095	0.48	8.82	8.08	8.55	0.00062	0.03742	-122	
100	100	2100	0.48	9.24	8.50	8.98	0.00059	0.03551	-127	
105	105	2105	0.48	9.67	8.93	9.40	0.00056	0.03379	-132	
110	110	2110	0.47	10.09	9.35	9.82	0.00054	0.03221	-137	
115	115	2115	0.47	10.52	9.78	10.25	0.00051	0.03077	-142	~bedrock

Total Cons. Foundation	**2.35**	**inches**
k	1	
3D settl	**2.35**	**inches**

Secondary Consolidation

Estimating Time to 90% Consolidation

	native	pvd-5ft spacing (n=10)	
Tv 90%	0.848	0.4543	Time Factor
Hdr	70	70	ft
	2133.6	2133.6	cm
Cv max	0.0074	0.0074	cm^2/sec @ 3 ksf
t min	16.5	8.9	years
Cv med	0.00365	0.00365	cm^2/sec @ 3 ksf
t med	33.5	18.0	years

3D Effect

We know from lab results that the clay is not normaly consolidated and there is a ratio of OCR about 2. Therefore, it is conservative to use a Skepmton A ratio of 0.5, resulting in k= 0.91

APPENDIX A2 UNIFORM SETTLEMENT

Consolidation of DMMF Foundation at Design Mudline Elevation

CONSTANT INPUTS			
Par.	***Value***	***Unit***	***Source***
σ_{pc}	0.74	***ksf***	min
B	2000	***ft***	Design
γ_{sub}	0.085	***kcf***	median
γ_w	62.4	**pcf**	Water Density
Δσ	1	**ksf**	Design Surcharge
e_0	0.72	**-**	median
Cc	0.1925	**-**	median
Cr	0.025	**-**	median
H	5	**ft**	Incremental Depth

$$\Delta e := C_c \cdot \log\left(\frac{\sigma_{o+\Delta\sigma}}{\sigma_o}\right)$$

$$\sum_{layer\ n}^{layer\ 1} S = \frac{C_{(c\ or\ r)}\ H}{1+e_0}\ \log_{10}\left(\frac{p_0 + \Delta p_{1\ to\ n}}{p_0}\right)$$

D	Z	B'	Δσ	σ_{pc}	σ_0	σ_T	Δe_z	S_z	LWD	
0	0	2000	1.00	0.74	0.00	1.00	0.00000	0.00000	-27	~mudline
5	5	2005	1.00	1.17	0.43	1.42	0.01312	0.78906	-32	
10	10	2010	1.00	1.59	0.85	1.85	0.00841	0.50572	-37	
15	15	2015	0.99	2.02	1.28	2.27	0.00625	0.37554	-42	
20	20	2020	0.99	2.44	1.70	2.69	0.00498	0.29928	-47	
25	25	2025	0.99	2.87	2.13	3.11	0.00414	0.24886	-52	~cell bottom
30	30	2030	0.99	3.29	2.55	3.54	0.00355	0.21297	-57	
35	35	2035	0.98	3.72	2.98	3.96	0.00310	0.18607	-62	
40	40	2040	0.98	4.14	3.40	4.38	0.00275	0.16514	-67	
45	45	2045	0.98	4.57	3.83	4.80	0.00247	0.14839	-72	
50	50	2050	0.98	4.99	4.25	5.23	0.00224	0.13468	-77	
55	55	2055	0.97	5.42	4.68	5.65	0.00205	0.12325	-82	
60	60	2060	0.97	5.84	5.10	6.07	0.00189	0.11356	-87	
65	65	2065	0.97	6.27	5.53	6.49	0.00175	0.10526	-92	
70	70	2070	0.97	6.69	5.95	6.92	0.00163	0.09806	-97	
75	75	2075	0.96	7.12	6.38	7.34	0.00153	0.09175	-102	
80	80	2080	0.96	7.54	6.80	7.76	0.00144	0.08618	-107	
85	85	2085	0.96	7.97	7.23	8.18	0.00135	0.08123	-112	
90	90	2090	0.96	8.39	7.65	8.61	0.00128	0.07680	-117	
95	95	2095	0.95	8.82	8.08	9.03	0.00121	0.07281	-122	
100	100	2100	0.95	9.24	8.50	9.45	0.00115	0.06920	-127	
105	105	2105	0.95	9.67	8.93	9.88	0.00110	0.06592	-132	
110	110	2110	0.95	10.09	9.35	10.30	0.00105	0.06292	-137	
115	115	2115	0.95	10.52	9.78	10.72	0.00100	0.06017	-142	~bedrock

Total Cons. Foundation	**4.17**	**inches**
k	1	
3D settl	**4.17**	**inches**

Secondary Consolidation

Estimating Time to 90% Consolidation

	native	pvd-5ft spacing (n=10)	
Tv 90%	0.848	0.4543	Time Factor
Hdr	70	70	ft
	2133.6	2133.6	cm
Cv max	0.0074	0.0074	cm^2/sec @ 3 ksf
t min	16.5	8.9	years
Cv med	0.00365	0.00365	cm^2/sec @ 3 ksf
t med	33.5	18.0	years

3D Effect

We know from lab results that the clay is not normaly consolidated and there is a ratio of OCR about 2. Therefore, it is conservative to use a Skepmton A ratio of 0.5, resulting in k= 0.91

APPENDIX A2 UNIFORM SETTLEMENT

Consolidation of DMMF Foundation at Design Mudline Elevation

CONSTANT INPUTS			
Par.	*Value*	*Unit*	*Source*
σ_{pc}	0.74	***ksf***	min
B	2000	***ft***	Design
γ_{sub}	0.085	***kcf***	median
γ_w	62.4	**pcf**	Water Density
Δσ	1.5	**ksf**	Design Surcharge
e_0	0.72	**-**	median
Cc	0.1925	**-**	median
Cr	0.025	**-**	median
H	5	**ft**	Incremental Depth

$$\Delta e := C_c \cdot \log\left(\frac{\sigma_{o+\Delta\sigma}}{\sigma_o}\right)$$

$$\sum_{layer\ n}^{layer\ 1} S = \frac{C_{(c\ or\ r)}\ H}{1+e_0}\ \log_{10}\left(\frac{p_0 + \Delta p_{1\ to\ n}}{p_0}\right)$$

D	Z	B'	Δσ	σ_{pc}	σ_0	σ_T	Δe_z	S_z	LWD	
0	0	2000	1.50	0.74	0.00	1.50	0.00000	0.00000	-27	~mudline
5	5	2005	1.50	1.17	0.43	1.92	0.01638	0.98602	-32	
10	10	2010	1.49	1.59	0.85	2.34	0.01101	0.66186	-37	
15	15	2015	1.49	2.02	1.28	2.76	0.00840	0.50485	-42	
20	20	2020	1.49	2.44	1.70	3.19	0.00682	0.40958	-47	
25	25	2025	1.48	2.87	2.13	3.61	0.00574	0.34498	-52	~cell bottom
30	30	2030	1.48	3.29	2.55	4.03	0.00496	0.29809	-57	
35	35	2035	1.47	3.72	2.98	4.45	0.00437	0.26242	-62	
40	40	2040	1.47	4.14	3.40	4.87	0.00390	0.23434	-67	
45	45	2045	1.47	4.57	3.83	5.29	0.00352	0.21163	-72	
50	50	2050	1.46	4.99	4.25	5.71	0.00321	0.19288	-77	
55	55	2055	1.46	5.42	4.68	6.13	0.00295	0.17714	-82	
60	60	2060	1.46	5.84	5.10	6.56	0.00273	0.16372	-87	
65	65	2065	1.45	6.27	5.53	6.98	0.00253	0.15215	-92	
70	70	2070	1.45	6.69	5.95	7.40	0.00237	0.14208	-97	
75	75	2075	1.45	7.12	6.38	7.82	0.00222	0.13321	-102	
80	80	2080	1.44	7.54	6.80	8.24	0.00209	0.12536	-107	
85	85	2085	1.44	7.97	7.23	8.66	0.00197	0.11836	-112	
90	90	2090	1.44	8.39	7.65	9.09	0.00187	0.11207	-117	
95	95	2095	1.43	8.82	8.08	9.51	0.00177	0.10639	-122	
100	100	2100	1.43	9.24	8.50	9.93	0.00169	0.10124	-127	
105	105	2105	1.43	9.67	8.93	10.35	0.00161	0.09654	-132	
110	110	2110	1.42	10.09	9.35	10.77	0.00154	0.09224	-137	
115	115	2115	1.42	10.52	9.78	11.19	0.00147	0.08830	-142	~bedrock

Total Cons. Foundation	**5.72**	**inches**
k	1	
3D settl	**5.72**	**inches**

Secondary Consolidation

Estimating Time to 90% Consolidation

	native	pvd-5ft spacing (n=10)	
Tv 90%	0.848	0.4543	Time Factor
Hdr	70	70	ft
	2133.6	2133.6	cm
Cv max	0.0074	0.0074	cm^2/sec @ 3 ksf
t min	16.5	8.9	years
Cv med	0.00365	0.00365	cm^2/sec @ 3 ksf
t med	33.5	18.0	years

3D Effect

We know from lab results that the clay is not normaly consolidated and there is a ratio of OCR about 2. Therefore, it is conservative to use a Skepmton A ratio of 0.5, resulting in k= 0.91